PRODUCT CATALOGUE

trafo modern

You better be safe.

TRANSFORMERS
POWER SUPPLIES
CHOKES
CUSTOMIZED COMPONENTS

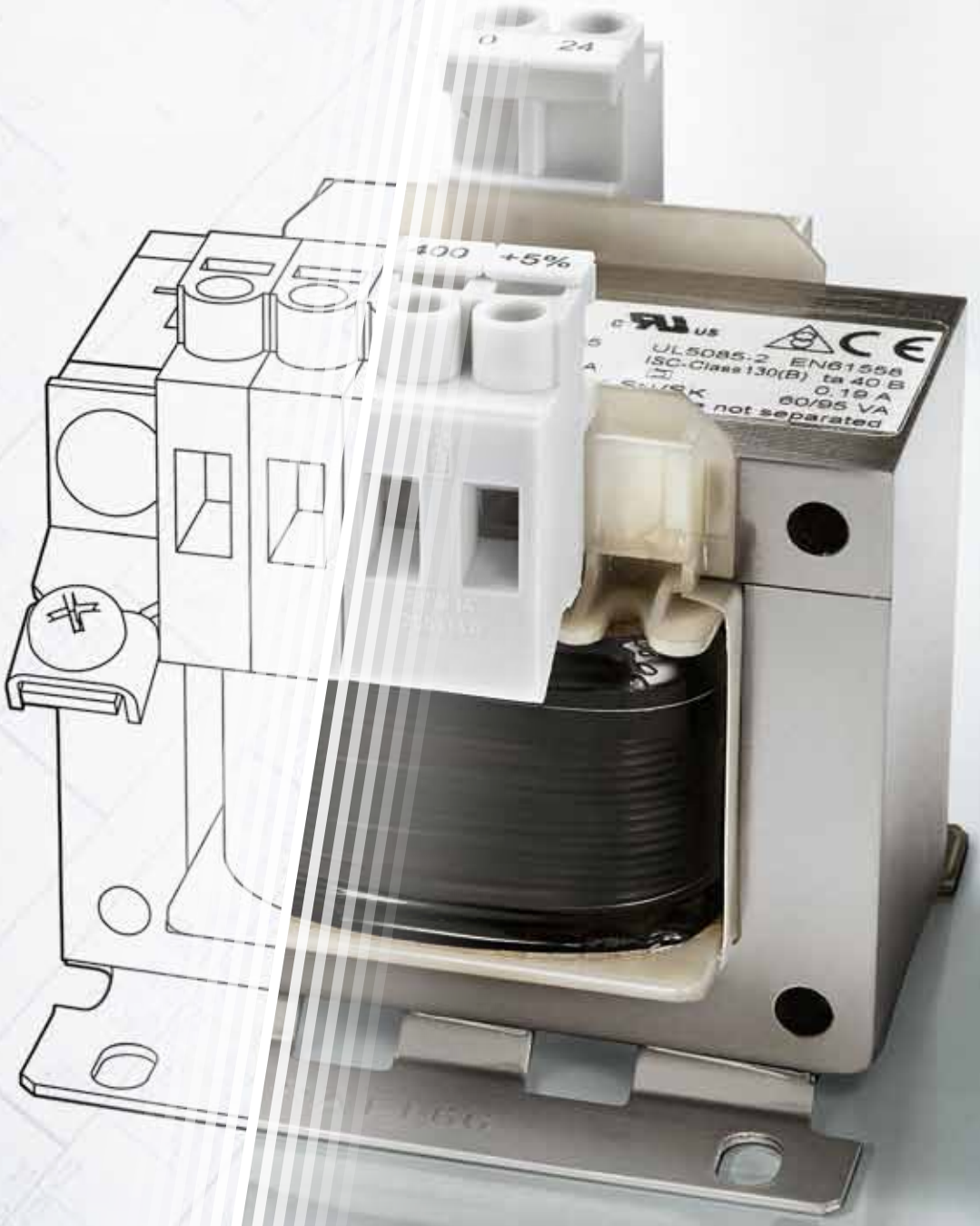

70 YEARS TRAFOMODERN

www.trafomodern.com

ABOUT TRAFOMODERN

Since 1945, trafomodern Transformatorengesellschaft m.b.H. located in Hornstein, Austria has been developing, producing and selling transformers, chokes, power supplies and other electrical components.

trafomodern is an international small to medium-sized enterprise (SME) with strong Austrian roots. trafomodern customers at home and abroad trust our competence and have made us the Austrian market leader for inductive components. Our strength is in understanding and satisfying the customer's specific requirements.

The trafomodern product portfolio comprises transformers from 30 VA to 800 kVA with rated voltages up to 12 kV. Our chokes cover the spectrum from 0.2 Ws to 20 kWs. We deliver standard power supplies up to 50 A, and can offer special units up to 2000 A.

An outstanding feature of many of our products is that we satisfy a wide range of national and international standards. Most of our products carry the certification of at least one national or international test authority such as UL and CSA. Further detailed technical information can be found online under www.trafomodern.com.

This catalogue only shows the standard portfolio. But success in the market is achieved only by satisfying customers' specific requirements: Do you need a different configuration for your power supply unit, or need additional sub-systems for your transformer? Or just a different mounting bracket? No problem. Even if you require inductive components with special technical features, trafomodern will design and build your inductive products with the special features you require, such as for operation at high ambient temperatures or with special protection against moisture. Trafomodern thinks of each inductive component as a miniature system. Our sales team will be pleased to advise you.

trafomodern Transformatoren Ges.m.b.H.
Industriestrasse II/11 / 7053 Hornstein, Austria
Phone: +43 2689 2744 - 0 / Fax: +43 2689 2744 - 9
info@trafomodern.com / www.trafomodern.com

trafo modern
You better be safe.

TRANSFORMERS Single-phase

TYPE	DESCRIPTION	PAGE
STN, STI	Single-phase control transformers with preferred rated voltage (types on stock)	6-7
STN	Single-phase control transformers	8-9
STI	Single-phase control, isolating and safety transformers	10–11
STZ	Single-phase control, isolating and safety transformers	12–13
STA	Single-phase control transformers (ATEX-tested)	14–15
ET, ETF	Single-phase matching transformers	16–17
ETSP, ETFSP	Single-phase autotransformers	18–19
UTI	Single-phase multi-winding transformers	20–21
TT	Portable transformers for protective separation	22–23

TRANSFORMERS Three-phase

TYPE	DESCRIPTION	PAGE
DTI	Three-phase control, isolating and safety transformers	24–25
DTZ	Three-phase control, isolating and safety transformers	26–27
DT	Three-phase matching transformers	28–29
DTF	Three-phase autotransformers	30–31
D4TB, D4TF	Three-phase transformers with 4% u_k	32–33
DTSP	Three-phase autotransformers	34–35
DTFSP	Three-phase autotransformers	36–37
DA, DACB, DANF	Series transformers (with integrated mains filter and circuit breaker)	38–39
DSB	Earthing autotransformers	40–41

POWER SUPPLY UNITS

TYPE	DESCRIPTION	PAGE
GW, GD	Single-phase, three-phase power supplies	42–43

CHOKES

TYPE	DESCRIPTION	PAGE
DEG	Single-phase smoothing chokes	44–45
DEK	Single-phase commutating chokes	46–47
DDK	Three-phase commutating chokes	48–49

ADDITIONAL EQUIPMENT

TYPE	DESCRIPTION	PAGE
	Enclosures	
IP23	Protective steel sheet enclosure IP23	50–51
	Optional equipment	
STR	Increased currents	52
W, TA, ZA	Static shield winding, Tropics resistant, Additional tapping	57
EEB, DEB	Inrush current limiter	54
C4, ZW, DZW	Screw-less terminal, Additional windings, Special accessories	55

ENGINEERING DATA

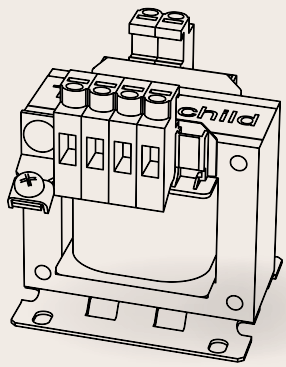

DESCRIPTION	PAGE
General Terms and Conditions of Purchase	56–57
Trademarks	57
General design	58
Terms and definitions	59
Engineering data	60-62

Designed and tested according
- IEC/EN 61558-2-2
- VDE 0570-2-2
- UL 5085-2
- CSA 22.2 No. 66

For use according to
- IEC/EN 60204-1
- VDE 0113 / VDE 0100 Teil 410

Typical application
- Control voltage circuits
- Functional low voltage

Basic equipment
- Separate windings
- Insulation class B
- Ambient temperature –25 to 40 °C
- Connection terminal (<63 A)
- Frequency 50/60 Hz
- ±5 % tapping on the primary side

Technical data: see page 9.

Rated output	Short time rating	Type Order no.	Type Order no.	Type Order no.	Cu factor [1]
kVA	kVA	400/230 V	400/24 V	230/24 V	
0.06	0.095	**STN0,06(400/230)** 4001619	**STN0,06(400/24)** 4001620	**STN0,06(230/24)** 4001618	0.20
0.1	0.16	**STN0,1(400/230)** 4001623	**STN0,1(400/24)** 4001624	**STN0,1(230/24)** 4001622	0.30
0.16	0.32	**STN0,16(400/230)** 4001627	**STN0,16(400/24)** 4001628	**STN0,16(230/24)** 4001626	0.38
0.2	0.38	**STN0,2(400/230)** 4001631	**STN0,2(400/24)** 4001632	**STN0,2(230/24)** 4001630	0.55
0.25	0.44	**STN0,25(400/230)** 4001634	**STN0,25(400/24)** 4001635	**STN0,25(230/24)** 4001633	0.65
0.315	0.6	**STN0,315(400/230)** 4001637	**STN0,315(400/24)** 4001638	**STN0,315(230/24)** 4001636	0.80
0.4	0.62	**STN0,4(400/230)** 4001640	**STN0,4(400/24)** 4001641	**STN0,4(230/24)** 4001639	1.10
0.5	0.88	**STN0,5(400/230)** 4001643	**STN0,5(400/24)** 4001644	**STN0,5(230/24)** 4001642	1.15
0.63	1.51	**STN0,63(400/230)** 4001646	**STN0,63(400/24)** 4001647	**STN0,63(230/24)** 4001645	1.35
0.8	2.25	**STN0,8(400/230)** 4001649	**STN0,8(400/24)** 4001650	**STN0,8(230/24)** 4001648	2.30
1	3.28	**STN1,0(400/230)** 4001652	**STN1,0(400/24)** 4001653	**STN1,0(230/24)** 4001651	2.00
1.3	4.08	**STN1,3(400/230)** 4001654	-	-	3.10
1.6	3.98	**STN1,6(400/230)** 4001655	-	-	3.40
2	5.75	**STN2,0(400/230)** 4001656	-	-	4.40
2.5	7.24	**STN2,5(400/230)** 4001657	-	-	6.00
3	8.36	**STN3,0(400/230)** 4001658	-	-	7.00
4	12.2	**STN4,0(400/230)** 4001659	-	-	8.00

[1] The calculation method of the material price surcharge will be explained in Section 2.1 in the general conditions of business.
Sample order
The order number depends on the type and the preferred rated voltages:
- requested type: STN0,63
- requested preferred rated voltages: 400/24 V
- order number: 4001647

Phone: +43 2689 2744 - 0 | Fax: +43 2689 2744 - 9 | info@trafomodern.com | www.trafomodern.com

Designed and tested according
- IEC/EN 61558-2-2 / 2-4 / 2-6
- VDE 0570-2-2 / 2-4 / 2-6
- UL 5085-2
- CSA 22.2 No. 66

For use according to
- IEC/EN 60204-1
- VDE 0113 / VDE 0100 Teil 410

Typical applications
- Control voltage circuits
- Functional low voltage
- Protective separation

Basic equipment
- Seperate windings
- Insulation class B
- Ambient temperature –25 to 40 °C
- Connection terminal (<63 A)
- Frequency 50/60 Hz
- ±5 % tapping on the primary side

Technical data: see page 11.

Rated output	Short time rating	Type Order no.	Type Order no.	Type Order no.	Type Order no.	Cu factor [1]
kVA	kVA	400/230 V	400/24 V	230/230 V	230/24 V	
0.06	0.13	**STI0,06(400/230)** 4001568	**STI0,06(400/24)** 4001569	**STI0,06(230/230)** 4001566	**STI0,06(230/24)** 4001567	0.20
0.1	0.24	**STI0,1(400/230)** 4001572	**STI0,1(400/24)** 4001573	**STI0,1(230/230)** 4001570	**STI0,1(230/24)** 4001571	0.25
0.16	0.36	**STI0,16(400/230)** 4001576	**STI0,16(400/24)** 4001577	**STI0,16(230/230)** 4001574	**STI0,16(230/24)** 4001575	0.40
0.2	0.44	**STI0,2(400/230)** 4001581	**STI0,2(400/24)** 4001582	**STI0,2(230/230)** 4001578	**STI0,2(230/24)** 4001580	0.65
0.25	0.6	**STI0,25(400/230)** 4001585	**STI0,25(400/24)** 4001586	**STI0,25(230/230)** 4001583	**STI0,25(230/24)** 4001584	0.80
0.315	0.75	**STI0,315(400/230)** 4001589	**STI0,315(400/24)** 4001590	**STI0,315(230/230)** 4001587	**STI0,315(230/24)** 4001588	1.10
0.4	1.1	**STI0,4(400/230)** 4001593	**STI0,4(400/24)** 4001594	**STI0,4(230/230)** 4001591	**STI0,4(230/24)** 4001592	1.15
0.5	1.6	**STI0,5(400/230)** 4001597	**STI0,5(400/24)** 4001598	**STI0,5(230/230)** 4001595	**STI0,5(230/24)** 4001596	1.40
0.63	1.7	**STI0,63(400/230)** 4001601	**STI0,63(400/24)** 4001602	**STI0,63(230/230)** 4001599	**STI0,63(230/24)** 4001600	1.90
0.8	2.4	**STI0,8(400/230)** 4001605	**STI0,8(400/24)** 4004918	**STI0,8(230/230)** 4001603	**STI0,8(230/24)** 4001604	2.10
1	2.8	**STI1,0(400/230)** 4001608	**STI1,0(400/24)** 4002884	**STI1,0(230/230)** 4001606	**STI1,0(230/24)** 4001607	2.20
1.3	3.7	**STI1,3(400/230)** 4001609	-	**STI1,3(230/230)** 4014112	-	3.20
1.6	5.5	**STI1,6(400/230)** 4001611	-	**STI1,6(230/230)** 4001610	-	3.40
2	7	**STI2,0(400/230)** 4001613	-	**STI2,0(230/230)** 4001612	-	4.00
2.5	9	**STI2,5(400/230)** 4001615	-	**STI2,5(230/230)** 4001614	-	5.50
3	11.5	**STI3,0(400/230)** 4001616	-	-	-	9.50
4	15	**STI4,0(400/230)** 4007015	-	-	-	10.40

[1] The calculation method of the material price surcharge will be explained in Section 2.1 in the general conditions of business.
Sample order
The order number depends on the type and the preferred rated voltages:
- requested type: STI 0.1
- requested preferred rated voltages: 400/230 V
- order number: 4001572

Designed and tested to
- IEC/EN 61558-2-2
- VDE 0570-2-2
- UL 5085-2
- CSA 22.2 No. 66

For use according to
- IEC/EN 60204-1
- VDE 0113 / VDE 0100 Teil 410

Typical applications
- Control voltage circuits
- Functiona low voltage

Basic equipment
- Separate windings
- Insulation class B
- Ambient temperature –25 to 40 °C
- Connection by terminals (<63 A)
- Frequency 50/60 Hz
- ±5 % tapping on the primary side

Further equipment
- IP23 enclosure page 50
- Additional tapping page 53
- Additional winding page 55
- Temperature monitoring page 55
- Static shield winding page 53
- Tropicalised version page 53

Rated output	Short time rating	Rated input voltage	Rated input voltage	Type	Cu factor [1]
kVA	kVA	V (selectable)	V (selectable)		
0.03	0.045	100 - 690	12 - 250	STN0,03(*/*)	0.08
0.06	0.095			STN0,06(*/*)	0.20
0.1	0.16			STN0,1(*/*)	0.30
0.16	0.32			STN0,16(*/*)	0.38
0.2	0.38			STN0,2(*/*)	0.55
0.25	0.44			STN0,25(*/*)	0.65
0.315	0.6			STN0,315(*/*)	0.80
0.4	0.62			STN0,4(*/*)	1.10
0.5	0.88			STN0,5(*/*)	1.15
0.63	1.51			STN0,63(*/*)	1.35
0.8	2.25			STN0,8(*/*)	2.30
1	3.28			STN1,0(*/*)	2.00
1.3	4.08			STN1,3(*/*)	3.10
1.6	3.98			STN1,6(*/*)	3.40
2	5.75			STN2,0(*/*)	4.40
2.5	7.24			STN2,5(*/*)	6.00
3	8.36			STN3,0(*/*)	7.00
4	12.2			STN4,0(*/*)	8.00

[1] The calculation method of the material price surcharge will be explained in Section 2.1 in the general conditions of business.

Please note the information regarding the protection of transformers on page 62.

- Type STN transformers are suitable for use in control circuits to VDE 0113 and IEC/EN 60 204.
- UL/CSA only up to 600 V (incl. tapping)
- CUR to UL-file XPTQ2. and XPTQ8.E168819 (general purpose component, type tested)

When ordering, the type designation must be extended by addition of the following data:

STN0,1(*/*)
1st place holder ≙ rated input voltage
2nd place holder ≙ rated output voltage

Sample order
- requested type STN0,1
- requested rated input voltage 200 V
- requested rated output voltage 18,5 V

The correct type designation reads
STN0,1(200/18.5)

The unique article number for your configuration will be defined by trafomodern during the quotation and ordering process.

Phone: +43 2689 2744 - 0 / Fax: +43 2689 2744 - 9 / info@trafomodern.com / www.trafomodern.com

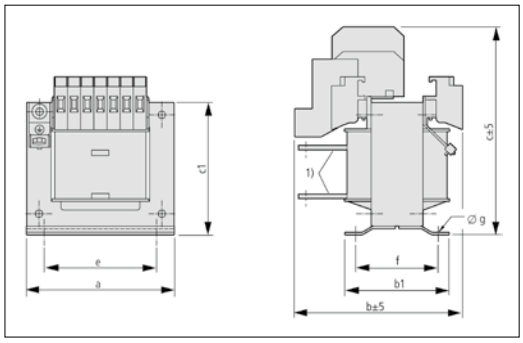

Fig. 1

Type	Total weight	No-load losses	Short-circuit losses 1)	Short-circuit voltage	Efficiency	a	b	c	b	c	b	c	b	c	b	c	e	f	ø g	b1	c1
	kg	W	W	%			12 V		24 V		42 V		110 V		230 V						
STN0,03	0,7	4	5	11	0,75	66	62	78	62	78	62	78	62	78	62	78	50	44	4,8 x 8	55	60
STN0,06	1	7	10	11	0,79	66	79	78	79	78	79	78	79	78	79	78	50	56	4,8 x 8	67	60
STN0,1	1,5	7	15	10	0,84	85	75	91	75	91	75	91	75	91	75	91	64	47	4,8 x 8	60	76
STN0,16	2,4	11	16	6,7	0,87	85	97	91	97	91	97	91	97	91	97	91	64	70	4,8 x 8	83	76
STN0,2	2,8	9	19	6,8	0,88	106	83	112	83	112	83	112	83	112	83	112	80	61	5,8 x 12	80	97
STN0,25	2,9	9	21	6,3	0,9	106	103	121	83	112	83	112	83	112	83	112	80	61	5,8 x 12	80	97
STN0,315	3,5	11	21	5,3	0,91	106	111	121	91	112	91	112	91	112	91	112	80	70	5,8 x 12	89	97
STN0,4	4,2	12	27	5,3	0,92	121	108	133	88	124	88	124	88	124	88	124	90	68	5,8 x 12	86	106
STN0,5	5,1	15	27	4,1	0,93	121	120	133	120	133	100	124	100	124	100	124	90	80	5,8 x 12	98	106
STN0,63	7,1	21	32	3,8	0,93	151	121	157	121	157	107	145	107	145	107	145	122	82	7 x 15	104	132
STN0,8	9,8	24	24	2,5	0,94	151	124	196	138	157	124	145	124	145	124	145	122	99	7 x 15	121	132
STN1,0	12,4	33	26	2,2	0,94	151	150	196	164	157	164	157	150	145	150	145	122	125	7 x 15	147	132
STN1,3	14,1	46	33	2,1	0,94	175	138	213	148	169	148	169	138	157	138	157	135	110	7 x 15	135	152
STN1,6	14,3	43	44	2,5	0,95	175	183	170	138	216	148	169	138	157	138	157	135	110	7 x 15	135	152
STN2,0	19,9	56	42	2	0,95	175	213	170	168	216	178	169	168	157	168	157	135	140	7 x 15	165	152

All dimensions in mm

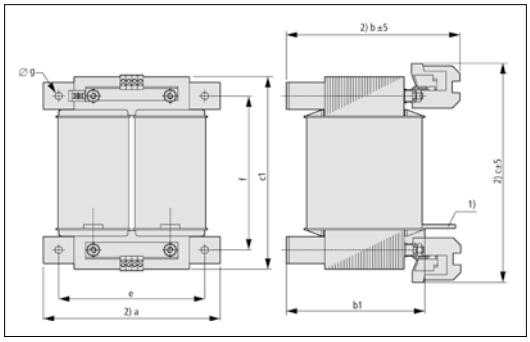

Fig. 2

Type	Total weight	No-load losses	Short-circuit losses 1)	Short-circuit voltage	Efficiency	a	b1	c1	e	f	ø g	b	c	b	c	b	c	b	c	b	c
	kg	W	W	%								12 V	12 V	24 V	24 V	42 V	42 V	110 V	110 V	230 V	230 V
STN2,5	20	21	145	2,4	0,95	230	130	250	190	200	11	185	260	185	250	205	255	160	275	145	255
STN3,0	23	32	94	2,4	0,96	230	155	250	190	200	11	210	260	230	250	230	255	185	275	170	255
STN4,0	27	28	143	2,4	0,96	230	170	250	190	200	11	225	260	245	250	245	255	200	275	185	255

All dimensions in mm

Designed and tested according
- IEC/EN 61558-2-2 / 2-4 / 2-6
- VDE 0570-2-2 / 2-4 / 2-6
- UL 5085-2
- CSA 22.2 No. 66

For use according to
- IEC/EN 60204-1
- VDE 0113 / VDE 0100 part 410

Typical applications
- Control voltage circuits
- Functional low voltage
- Safety low voltage
- Protective separation

Basic equipment
- Seperate windings
- Insulation class B
- Ambient temperature –25 to 40 °C
- Connection terminal (<63 A)
- Frequency 50/60 Hz
- ±5 % tapping on the primary side

Rated output	Short time rating	Rated input voltage	Rated output voltage	Type	Cu factor [1]
kVA	kVA	V (selectable)	V (selectable)		
0.06	0.13	230 ± 5 % 400 ± 5 %	12 24	**STI0,06(*/*)**	0.20
0.1	0.24	415 ± 5 % 440 ± 5 %	42 110	**STI0,1(*/*)**	0.25
0.16	0.36	500 ± 5 % 690 ± 5 %	230	**STI0,16(*/*)**	0.40
0.2	0.44			**STI0,2(*/*)**	0.65
0.25	0.6			**STI0,25(*/*)**	0.80
0.315	0.75			**STI0,315(*/*)**	1.10
0.4	1			**STI0,4(*/*)**	1.15
0.5	1.6			**STI0,5(*/*)**	1.40
0.63	1.7			**STI0,63(*/*)**	1.90
0.8	2			**STI0,8(*/*)**	2.10
1	2.8			**STI1,0(*/*)**	2.20
1.3	3.7			**STI1,3(*/*)**	3.20
1.6	5.5			**STI1,6(*/*)**	3.40
2	7			**STI2,0(*/*)**	4.00
2.5	9			**STI2,5(*/*)**	5.50
3	11.5			**STI3,0(*/*)**	9.50
4	15			**STI4,0(*/*)**	10.40

[1] The calculation method of the material price surcharge will be explained in Section 2.1 in the general conditions of business.

Please note the information regarding the protection of transformers on page 62

- IEC/EN 61558 allows transformers with rated output voltages 12 V to 42 V to be used as safety transformers.
- UL/CSA only up to 600 V (incl. tapping)
- CUR to UL-file XPTQ2. and XPTQ8.E168819 (general purpose component, type tested)
- From STI0,315 (*/12) ---> STZ

When ordering, the type designation must be extended by addition of the following data:

STI0,06(*/*)
1st place holder ≙ rated input voltage
2nd place holder ≙ rated output voltage

Sample order
- requested type STI0,06
- requested rated input voltage 230 V
- requested rated output voltage 12 V

The correct type designation reads
STI0,06(230/12)

The unique article number for your configuration will be defined by trafomodern during the quotation and ordering process.

Phone: +43 2689 2744 - 0 / Fax: +43 2689 2744 - 9 / info@trafomodern.com / www.trafomodern.com

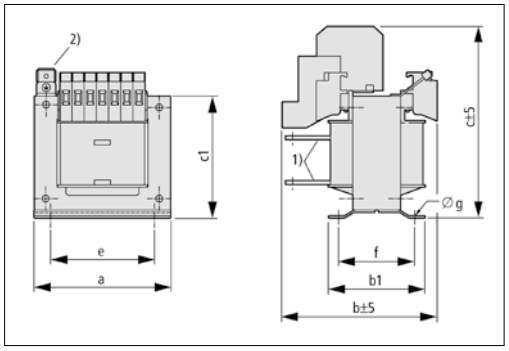

Fig. 1

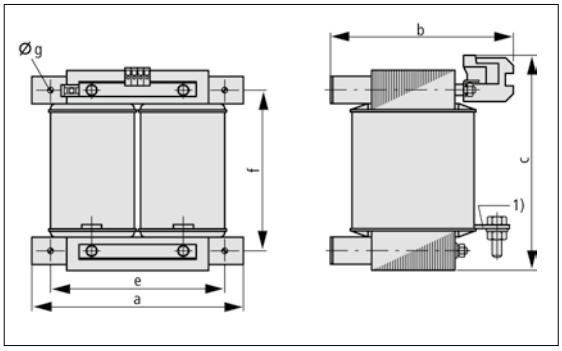

Fig. 2

Type	Total weight	No-load losses	Short-circuit losses [1]	Short-circuit voltage	Efficiency	a	b	c	b	c	b	c	b	c	b	c	e	f	ø g	b1	c1
	kg	W	W	%			12 V		24 V		42 V		110 V		230 V						
Fig1																					
STI0,06	1.5	6	5	7.8	0.85	85	75	91	75	91	75	91	75	91	75	91	64	47	4,8 x 8	60	76
STI0,1	2	7	8	6.9	0.87	85	89	91	89	91	89	91	89	91	89	91	64	61	4,8 x 8	74	76
STI0,16	2.3	9	12	6.6	0.88	85	97	91	97	91	97	91	97	91	97	91	64	70	4,8 x 8	83	76
STI0,2	3	11	17	6.6	0.88	106	83	112	83	112	83	112	83	112	83	112	80	61	5,8 x 12	80	97
STI0,25	3.8	13	14	5.1	0.9	106	111	124	91	112	91	112	91	112	91	112	80	70	5,8 x 12	89	97
STI0,315	4.3	10	18	5.5	0.92	121	-	-	88	119	88	119	88	119	88	119	90	68	5,8 x 12	86	106
STI0,4	5.2	17	18	4.4	0.92	121	-	-	100	119	100	119	100	119	100	119	90	80	5,8 x 12	98	106
STI0,5	6.8	15	24	3.9	0.93	121	-	-	140	131	120	119	120	119	120	119	90	100	5,8 x 12	118	106
STI0,63	7.7	15	27	4.1	0.94	151	-	-	121	157	107	145	107	145	107	145	122	82	7 x 15	104	132
STI0,8	9.6	17	25	3.2	0.95	151	-	-	138	157	124	145	124	145	124	145	122	99	7 x 15	121	132
STI1,0	13.4	27	29	2.9	0.95	151	-	-	164	157	164	157	150	145	150	145	122	125	7 x 15	147	132
STI1,3	14.9	32	35	3	0.95	175	-	-	148	169	148	169	138	157	138	157	135	110	7 x 15	135	152
STI1,6	17.4	21	37	2.4	0.96	195	-	-	142	240	149	186	142	174	142	174	150	110	10 x 18	140	166
STI2,0	21.5	27	33	2	0.97	195	-	-	154	240	161	186	154	174	154	174	150	122	10 x 18	152	166
STI2,5	21.5	39	43	2.4	0.97	195	-	-	154	240	154	240	161	186	154	174	150	122	10 x 18	152	166
Fig2																					
STI3,0	26	30	55	2.1	0.97	230	-	-	210	250	230	255	185	275	170	255	190	200	11	-	-
STI4,0	35	38	88	2.2	0.97	230	-	-	235	250	255	255	210	275	200	255	190	200	11	-	-

[1] Values measured at room temperature

All dimensions in mm

Designed and tested to
- IEC/EN 61558-2-2 / 2-4 / 2-6
- UL 5085-2
- CSA 22.2 No. 66

For use according to
- IEC/EN 60204-1

Typical applications
- Control circuits
- Protective separation
- SELV circuit (Separated extra-low voltage)
- FELV circuit (Functional extra-low voltage)

Basic equipment
- Separate windings
- Insulation class F
- Ambient temperature –25 to 40 °C
- Connection by terminals (<=115 A)
- Frequency 50/60 Hz
- ±5 % tapping on the primary side

Further equipment
- IP23 enclosure page 50
- Additional tapping page 53
- Additional winding page 55
- Temperature monitoring page 55
- Static shield winding page 53
- Tropicalised version page 53

Rated output	Short time rating	Rated input voltage	Rated output voltage	Type	Cu factor [1]
kVA	kVA	V (selectable)	V (selectable)		
0.06	0.13	50–950 ± 5 %	14-400	**STZ0,06(*/*)**	0.20
0.1	0.24			**STZ0,1(*/*)**	0.25
0.16	0.36			**STZ0,16(*/*)**	0.40
0.2	0.44		12-1000	**STZ0,2(*/*)**	0.65
0.25	0.6			**STZ0,25(*/*)**	0.80
0.315	0.75			**STZ0,315(*/*)**	1.10
0.4	1			**STZ0,4(*/*)**	1.15
0.5	1.6			**STZ0,5(*/*)**	1.40
0.63	1.7			**STZ0,63(*/*)**	1.90
0.8	2			**STZ0,8(*/*)**	2.10
1	2.8			**STZ1,0(*/*)**	2.20
1.3	3.7			**STZ1,3(*/*)**	3.20
1.6	5.5			**STZ1,6(*/*)**	3.40
2	7			**STZ2,0(*/*)**	4.00
2.5	9			**STZ2,5(*/*)**	5.50
3	11.5			**STZ3,0(*/*)**	9.50
4	15			**STZ4,0(*/*)**	10.40
5.3	13			**STZ5,3(*/*)**	12.50
8.3	21			**STZ8,3(*/*)**	17.50
13.3	34			**STZ13,3(*/*)**	25.00

Please note the information regarding the protection of transformers on page 62.

- IEC/EN 61558 allows transformers with rated output voltages <= 50 V to be used as safety transformers.
- Tropicalised transformers are coated with a special insulating varnish.
- UL/CSA only up to 600 V (incl. tapping)
- CUR to EIS 155, to OBJY2 or to OBJY8. E160829 (Systems, Electrical Insulation - Component or Systems, Electrical Insulation Certified for Canada - Component, insulation material system)

When ordering, the type designation must be extended by addition of the following data:

STZ5,3(*/*)
1st place holder ≙ rated input voltage
2nd place holder ≙ rated output voltage

Sample order
- requested type STZ5,3
- requested rated input voltage 230 V
- requested rated output voltage 36 V

The correct type designation reads
STZ5,3(230/36)

1) For additional charge for increased current see page 52.
2) The method of calculation of the material price surcharge is explained in point 2.1 of our general terms and conditions

The unique article number for your configuration will be defined by trafomodern during the quotation and ordering process.

Phone: +43 2689 2744 - 0 / Fax: +43 2689 2744 - 9 / info@trafomodern.com / www.trafomodern.com

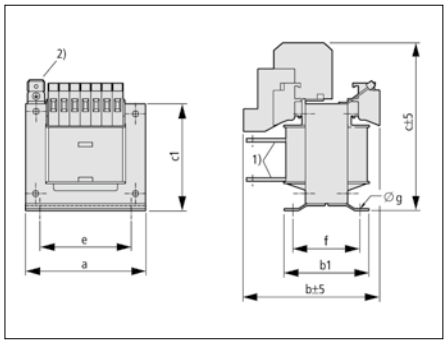

Fig. 1

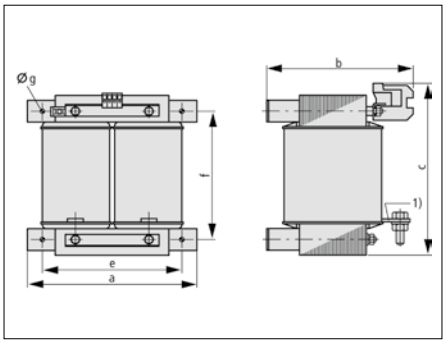

Fig. 2

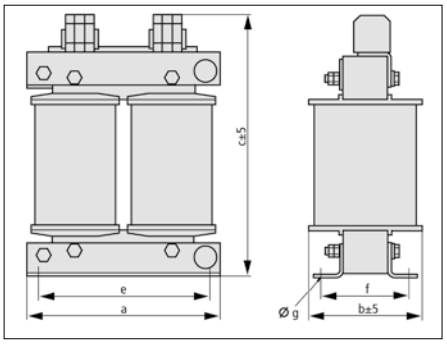

Fig. 3

1) Connection lugs
2) For type STI/STZ 0,06 - 0,16 earth connection downwards

Type	Total weight	No-load losses	Short-circuit losses [1]	Short-circuit voltage	Effi-ciency	a	b	c	b	c	b	c	b	c	b	c	e	f	ø g	b1	c1
	kg	W	W	%			12 V		24 V		42 V		110 V		230 V						
Fig. 1																					
STZ0,06	1.5	6	5	7.8	0.85	85	75	91	75	91	75	91	75	91	75	91	64	47	4,8 x 8	60	76
STZ0,1	2	7	8	6.9	0.87	85	89	91	89	91	89	91	89	91	89	91	64	61	4,8 x 8	74	76
STZ0,16	2.3	9	12	6.6	0.88	85	97	91	97	91	97	91	97	91	97	91	64	70	4,8 x 8	83	76
STZ0,2	3	11	17	6.6	0.88	106	83	112	83	112	83	112	83	112	83	112	80	61	5,8 x 9	80	97
STZ0,25	3.8	13	14	5.1	0.9	106	111	124	91	112	91	112	91	112	91	112	80	70	5,8 x 9	89	97
STZ0,315	4.3	10	18	5.5	0.92	121	-	-	88	119	88	119	88	119	88	119	90	68	5,8 x 12	86	106
STZ0,4	5.2	17	18	4.4	0.92	121	-	-	100	119	100	119	100	119	100	119	90	80	5,8 x 12	98	106
STZ0,5	6.8	15	24	3.9	0.93	121	-	-	140	131	120	119	120	119	120	119	90	100	5,8 x 12	118	106
STZ0,63	7.7	15	27	4.1	0.94	151	-	-	121	157	107	145	107	145	107	145	122	82	7 x 15	104	132
STZ0,8	9.6	17	25	3.2	0.95	151	-	-	138	157	124	145	124	145	124	145	122	99	7 x 15	121	132
STZ1,0	13.4	27	29	2.9	0.95	151	-	-	164	157	164	157	150	145	150	145	122	125	7 x 15	147	132
STZ1,3	14.9	32	35	3	0.95	175	-	-	148	169	148	169	138	157	138	157	135	110	7 x 15	135	152
STZ1,6	17.4	21	37	2.4	0.96	195	-	-	142	240	149	186	142	174	142	174	150	110	10 x 18	140	166
STZ2,0	21.5	27	33	2	0.97	195	-	-	154	240	161	186	154	174	154	174	150	122	10 x 18	152	166
STZ2,5	21.5	39	43	2.4	0.97	195	-	-	154	240	154	240	161	186	154	174	150	122	10 x 18	152	166
Fig2																					
STZ3,0	26	30	55	2.1	0.97	230	-	-	210	250	230	255	185	275	170	255	190	200	11	-	-
STZ4,0	32	38	88	2.2	0.97	230	-	-	235	250	255	255	210	275	200	255	190	200	11	-	-
Fig3																					
STZ5,3	40	40	165	4	0.96	260	200	*)	200	*)	200	*)	214	374	214	360	230	126	10 x 18	-	-
STZ8,3	55	65	200	4	0.97	260	-	-	230	*)	230	*)	244	374	244	374	230	156	10 x 18	-	-
STZ13,3	80	95	265	3.5	0.97	320	-	-	240	*)	240	*)	270	440	270	440	270	172	13 x 20	-	-

[1] Values measured at room temperature
*) The dimensions for the higher rated voltage are applicable

All dimensions in mm

Designed and tested to
- IEC/EN 61558-2-2 / 2-4 / 2-6
- EN 60079-0
- EN 60079-7

For use according to
- EU RL 94/9/EG

Typical applications
- Control circuits
- Protective separation
- SELV circuit
- (Separated extra-low voltage)
- FELV circuit
- (Functional extra-low voltage)

Basic equipment
- Separate windings
- Insulation class B
- Ambient temperature –25 to 40 °C
- Connection by terminals
- Frequency 50/60 Hz
- ±5 % tapping on the primary side

Device marking

II 2 G EEx e II

The transformer must always be installed in an approved enclosure to with a standardised flameproof rating to EN60079 (in practice „Ex e II" or „Ex p II").

Rated output	Short time rating	Rated input voltage	Rated output voltage	Type	Cu factor [2]
kVA	kVA	V (selectable)	V (selectable)		
0.1	0.24	50-750 ± 5 %	12-750	**STA0,1(*/*)**	0.35
0.2	0.44			**STA0,2(*/*)**	0.65
0.4	1.1			**STA0,4(*/*)**	1.00
0.5	1.6			**STA0,5(*/*)**	1.40
0.55	1.7			**STA0,55(*/*)**	1.70
0.75	2			**STA0,75(*/*)**	2.10
1.2	3.7			**STA1,2(*/*)**	3.20
1.6	5.5			**STA1,6(*/*)**	4.70

- IEC/EN 61558 allows transformers with rated output voltages <= 50 V to be used as safety transformers.

When ordering, the type designation must be extended by addition of the following data:

STA0,1(*/*)
1st place holder ≙ rated input voltage
2nd place holder ≙ rated output voltage

Sample order
- requested type STA0,1
- requested rated input voltage 230 V
- requested rated output voltage 36 V

The correct type designation reads
STA0,1(230/36)

1) For additional charge for increased current see page 52.
2) The method of calculation of the material price surcharge is explained in point 2.1 of our general terms and conditions

The unique article number for your configuration will be defined by trafomodern during the quotation and ordering process.

Phone: +43 2689 2744 - 0 / Fax: +43 2689 2744 - 9 / info@trafomodern.com / www.trafomodern.com

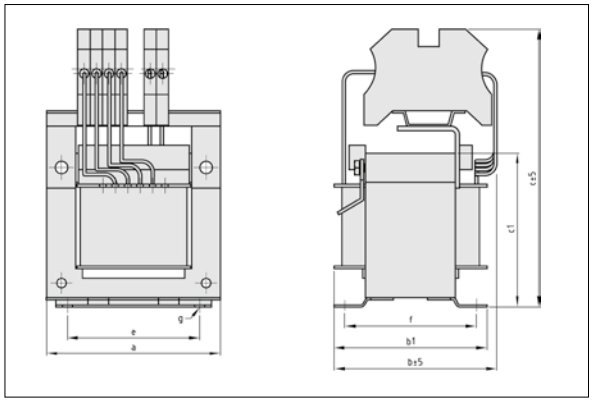

	Type	Total weight	No-load losses	Short-circuit losses[1]	Short-circuit voltage	Efficiency	a	b	c (WDU 4)	c (WDU 16)	e	f	ø g	b1	c1
		kg	W	W	%										
	STA0,1	2	6	11	7.5	0.86	85	80	135		64	61	4,8 x 8	74	74,5
	STA0,2	3	10	16	5.9	0.89	106	82	153		80,5	61	5,8 x 12	80	94
	STA0,4	5.2	18	22	4.1	0.91	121	100	163		90	80	5,8 x 12	98	106
	STA0,5	6.8	21	26	3.8	0.91	121	120	163		90	110	5,8 x 12	118	106
	STA0,55	7.7	21	25	3.6	0.92	151	107	187	201	122	82	7 x 15	104	132
	STA0,75	9.6	24	31	3.3	0.93	151	124	187	201	122	99	7 x 15	121	132
	STA1,2	14.9	41	37	2.5	0.94	175	138	210	224	135	110	7 x 15	135	152
2)	**STA1,6**	17.4	19	38	2.2	0.97	192	142	226	240	150	110	10 x 18	140	170

[1] Values measured at room temperature
[2] Instead of the split baseplate, STA1,6 has a mounting bracket

All dimensions in mm

Designed and tested according
- IEC/EN 61558-2-1
- EN 60076-1
- UL 5085-2
- CSA 22.2 No. 66

Typical applications
- Voltage adjustment

Basic equipment
- Separate windings
- Insulation class B / F from 6.3 kVA
- Ambient temperature –25 to 40 °C
- Connection terminal (<=115 A)
- Frequency 50/60 Hz

Further equipment
- IP23 enclosure page 50
- Additional tapping page 53
- Additional winding page 55
- Temperature monitoring page 55
- Static shield winding page 53
- Tropicalised version page 53

4)

Rated output for use according to insulation class 1)		Rated input voltage	Rated output voltage	Type	Cu factor 3)
B kVA	F kVA	V (selectable)	V (selectable)		
0.03	-	50-690	12-400	**ET0,03(*/*)**	0.14
0.06	-			**ET0,06(*/*)**	0.28
0.1	-			**ET0,1(*/*)**	0.38
0.16	-			**ET0,16(*/*)**	0.45
0.2	-	50-1000	12-1000	**ET0,2(*/*)**	0.55
0.25	-			**ET0,25(*/*)**	0.70
0.315	-			**ET0,315(*/*)**	0.83
0.4	-			**ET0,4(*/*)**	1.00
0.5	-			**ET0,5(*/*)**	1.10
0.63	-			**ET0,63(*/*)**	1.35
0.8	-			**ET0,8(*/*)**	2.20
1	-			**ET1,0(*/*)**	2.20
1.3	-			**ET1,3(*/*)**	2.45
1.6	-		24-1000	**ET1,6(*/*)**	3.90
2	-			**ET2,0(*/*)**	3.80
2.5	-			**ET2,5(*/*)**	6.80
3	-			**ET3,0(*/*)**	6.00
4	-			**ET4,0(*/*)**	9.90
5	-		60-1000	**ET5,0(*/*)**	8.60
6.3	8			**ET6,3(*/*)**	12.00
8.3	10			**ETF8,3(*/*)**	21.00
10	11.9			**ETF10(*/*)**	25.00
13	14.7			**ETF13(*/*)**	33.00

- Static shield winding means there is additional shielding between primary and secondary sides
- Tropicalised transformers are coated with a special insulating varnish. This varnish allows the transformer to be used in areas of high humidity.
- Transformer version with reinforced insulation available on request.
- UL/CSA only up to 600 V (incl. tapping)
- CUR to UL file XPTQ2.E168819 up to 4.0 kVA (transformers, general purpose component or transformers, general purpose certified for Canada - component, type testing)
- CUR to EIS 130 or EIS 155 to OBJY2. or OBJY8.E160829 (systems, electrical insulation component or systems, electrical insulation certified for Canada - component, insulation material system)

When ordering, the type designation must be extended by addition of the following data:

ET0,03(*/*)
1st place holder ≙ rated input voltage
2nd place holder ≙ rated output voltage

Sample order
- requested type ET0,03
- requested rated input voltage 230 V
- requested rated output voltage 12 V

The correct type designation reads
ET0,03(230/12)

1) Rated operating output is at max. 130 °C if the core insulation is class B; at max. 155 °C if the core insulation is class F
2) For additional charge for increased current see page 52
3) The method of calculation of the material price surcharge is explained in point 2.1 of our general terms and conditions
4) Only on request

The unique article number for your configuration will be defined by trafomodern during the quotation and ordering process.

Phone: +43 2689 2744 - 0 / Fax: +43 2689 2744 - 9 / info@trafomodern.com / www.trafomodern.com

Rated output for use according to insulation class		Rated input voltage	Rated output voltage	Type	Cu factor [1]
B kVA	F kVA	V (selectable)	V (selectable)		
16	19,2	50-1000	60-1000	ETF16(*/*)	35,00
21	24,3			ETF21(*/*)	38,00
25	28,8			ETF25(*/*)	40,00
33	38			ETF33(*/*)	52,00
40	46,7			ETF40(*/*)	56,00
53	59,3			ETF53(*/*)	75,00
67	74,7			ETF67(*/*)	78,00

[1] The method of calculation of the material price surcharge is explained in point 2.1 of our general terms and conditions

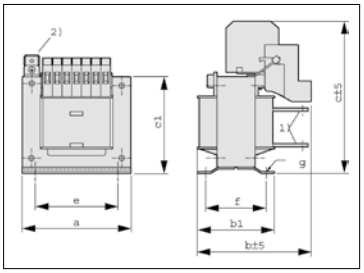

Fig. 1

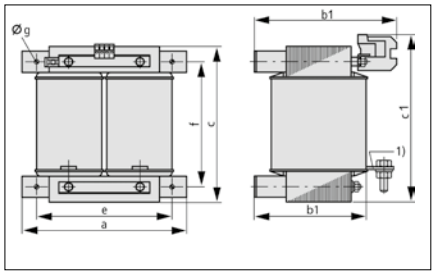

Fig. 2

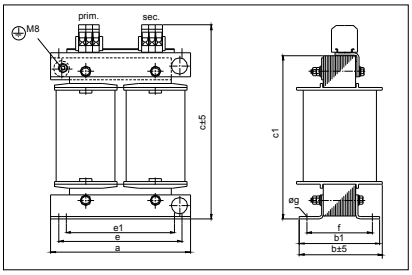

Fig. 3

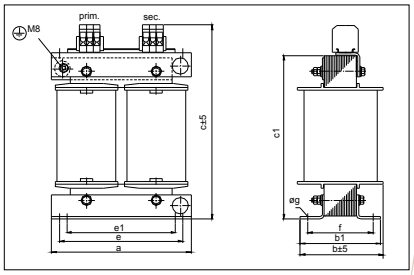

Fig. 4

Type	Total weight	No-load losses	Short-circuit losses [1]	Short-circuit voltage	Efficiency	a	b	c	b	c	b	c	b	c	b	c	e	f	ø g	b1	c1
	kg	W	W	%			12 V		24 V		42 V		110 V		230 V						
Fig 1																					
ET0,03	0.7	4	4	11.2	0.79	66	62	80	62	80	62	80	62	80	62	80	50	44	4,8 x 8	55	60
ET0,06	0.8	5	7	9.2	0.83	66	74	80	74	80	74	80	74	80	74	80	50	56	4,8 x 8	67	60
ET0,1	1.5	6	9	8.1	0.87	85	68	91	68	91	68	91	68	91	68	91	64	47	4,8 x 8	60	76
ET0,16	2	8	10	5.7	0.90	85	82	91	82	91	82	91	82	91	82	91	64	61	4,8 x 8	74	76
ET0,2	2.3	10	10	4.9	0.91	85	91	91	91	91	91	91	91	91	91	91	64	70	4,8 x 8	83	76
ET0,25	3	10	15	5.5	0.91	106	82	112	82	112	82	112	82	112	82	112	80	61	5,8 x 12	80	97
ET0,315	3.8	10	15	4.6	0.93	106	90	112	90	112	90	112	90	112	90	112	80	70	5,8 x 12	89	97
ET0,4	4.3	12	19	4.6	0.93	121	88	119	88	119	88	119	88	119	88	119	90	68	5,8 x 12	86	106
ET0,5	5.2	16	19	3.8	0.93	121	121	133	100	119	100	119	100	119	100	119	90	80	5,8 x 12	98	106
ET0,63	6.8	19	19	3	0.94	121	141	133	120	119	120	119	120	119	120	119	90	100	5,8 x 12	118	106
ET0,8	7.7	27	26	3.3	0.94	151	107	211	107	145	107	145	107	145	107	145	122	82	7 x 15	104	132
ET1,0	9.6	35	29	2.8	0.94	151	124	211	145	159	124	145	124	145	124	145	122	99	7 x 15	121	132
ET1,3	13.4	46	29	2.3	0.95	151	150	211	171	159	150	145	150	145	150	145	122	125	7 x 15	147	132
ET1,6	14.9	40	30	2.1	0.96	175	138	240	138	240	159	170	138	157	138	157	135	110	7 x 15	136	152
ET2,0	20	51	35	1.9	0.96	175	200	157	168	240	190	170	168	157	168	157	135	141	7 x 15	167	152
Fig 2																					
ET2,5	21	23	71	2.8	0.96	230	185	255	215	275	160	275	150	255	150	255	190	200	11	130	250
ET3,0	26	28	77	2.5	0.97	230	210	255	240	275	240	275	175	255	175	255	190	200	11	155	250
ET4,0	32	36	74	1.9	0.97	230	225	255	210	255	255	275	200	275	190	255	190	200	11	170	250
ET5,0	35	46	101	2.3	0.97	230	235	255	235	255	265	275	210	275	200	255	190	200	11	180	250

Type	Total weight	No-load losses	Short-circuit losses [1]	Short-circuit voltage	Efficiency	a	b*	b1	c	c1	e	e1	f	øg1	øg2
	kg	W	W	%											
Fig 3															
ET6,3	40	52	130	2.2	0.97	260	185	152	400	310	230	-	126	10 x 18	-
ETF8,3	75	60	250	2.4	0.96	320	233	173	435	370	270	-	143	13 x 20	-
ETF10	80	80	300	2.3	0.96	320	248	188	435	370	270	-	158	13 x 20	-
ETF13	95	85	280	1.7	0.97	320	263	203	435	370	270	-	173	13 x 20	-
ETF16	100	90	380	3.7	0.97	370	250	190	485	420	320	270	160	13 x 20	13 x 20
ETF21	120	115	450	3.1	0.97	370	277	217	485	420	320	270	187	13 x 20	13 x 20
ETF25	140	150	530	2.8	0.97	370	307	247	485	420	320	270	217	13 x 20	13 x 20
Fig 4															
ETF33	180	160	540	2.8	0.98	460	370	280	561	497	400	330	220	14	12
ETF40	190	200	825	3.1	0.97	460	400	310	561	497	400	330	250	14	12
ETF53	220	180	1260	4.0	0.97	480	350	260	706	642	400	-	200	14	-
ETF67	260	235	1580	3.9	0.97	480	380	290	706	642	400	-	230	14	-

[1] Values measured at room temperature

*External dimension for lug: ETF8,3-ETF25 +60mm for lug (already included)
*External dimension for lug: ETF33-ETF67 +90mm for lug (already included)

All dimensions in mm

Designed and tested to
- IEC/EN 61558-2-13/EN 60076-1

Typical applications
- Cost-efficient solutions for voltage adjustment

Basic equipment
- Insulation class B / F from 6.3 kVA
- Ambient temperature –25 to 40 °C
- Connection by terminals (<=115 A)
- Frequency 50/60 Hz

Further equipment
- IP23 enclosure page 50
- Additional tapping page 53
- Tropicalised version page 53
- Temperature monitoring page 55

4)

Rated output for use according to insulation class[1]		Rated input voltage	Rated output voltage	Type	Cu factor [3]
B kVA	F kVA	V (selectable)	V (selectable)		
0.03	-	50-1000	12-1000	ETSP0,03(*/*)	0.12
0.06	-			ETSP0,06(*/*)	0.20
0.1	-			ETSP0,1(*/*)	0.37
0.16	-			ETSP0,16(*/*)	0.45
0.2	-			ETSP0,2(*/*)	0.55
0.25	-			ETSP0,25(*/*)	0.70
0.315	-			ETSP0,315(*/*)	0.85
0.4	-			ETSP0,4(*/*)	1.10
0.5	-			ETSP0,5(*/*)	1.10
0.63	-			ETSP0,63(*/*)	1.35
0.8	-			ETSP0,8(*/*)	2.20
1	-			ETSP1,0(*/*)	2.20
1.3	-			ETSP1,3(*/*)	2.45
1.6	-		24-1000	ETSP1,6(*/*)	3.90
2	-			ETSP2,0(*/*)	3.80
2.5	-			ETSP2,5(*/*)	6.80
3	-			ETSP3,0(*/*)	6.00
4	-			ETSP4,0(*/*)	9.90
5	-		60-1000	ETSP5,0(*/*)	10.20
6.3	8			ETSP6,3(*/*)	12.00
8.3	10			ETFSP8,3(*/*)	21.00
10	11.9			ETFSP10(*/*)	25.00
13	14.7			ETFSP13(*/*)	33.00

- Tropicalised transformers are coated with a special insulating varnish. This varnish allows the transformer to be used in areas of high humidity.
- UL/CSA only up to 600 V (incl. tapping)
- CUR to EIS 130 or EIS 155 to OBJY2. or OBJY8.E160829 (systems, electrical insulation component or systems, electrical insulation certified for Canada - component, insulation material system)

When ordering, the type designation must be extended by addition of the following data:

ETFSP25(*/*)
1st place holder ≙ rated input voltage
2nd place holder ≙ rated output voltage

Sample order
- required throughput rating 55 kVA
- requested rated input voltage 400 V
- requested rated output voltage 230 V

Notes for selection
$S_T = S_N \cdot$ (1 - undervoltage/overvoltage)
= 55 kVA (1 - 230 V/400 V) = 23,4 kVA
S_T = Type rated output
S_N = Throughput rating = rated output
- The type rated output is always less than the throughput rating.
- Versions with delta stabilising winding available on request.

The correct type designation reads
ETFSP25(400/230)

The unique article number for your configuration will be defined by trafomodern during the quotation and ordering process.

Higher outputs available on request.

1) Rated operating output is
at max. 130 °C if the insulation is class B;
at max. 155 °C if the insulation is class F
2) For additional charge for increased current see page 52
3) The method of calculation of the material price surcharge is explained in point 2.1 of our general terms and conditions
4) Only on request

Phone: +43 2689 2744 - 0 / Fax: +43 2689 2744 - 9 / info@trafomodern.com / www.trafomodern.com

Rated output for use according to insulation class		Rated input voltage	Rated output voltage	Type	Cu factor [1]
B kVA	F kVA	V (selectable)	V (selectable)		
16	19,2	50-1000	60-1000	ETFSP16(*/*)	35,00
21	24,3			ETFSP21(*/*)	38,00
25	28,8			ETFSP25(*/*)	40,00
33	38			ETFSP33(*/*)	52,00
40	46,7			ETFSP40(*/*)	56,00
53	59,3			ETFSP53(*/*)	75,00
67	74,7			ETFSP67(*/*)	78,00

[1] The method of calculation of the material price surcharge is explained in point 2.1 of our general terms and conditions

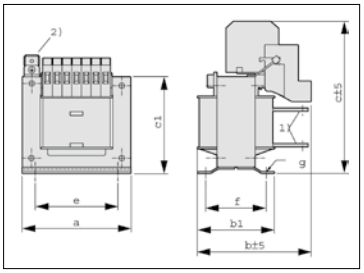

Fig. 1

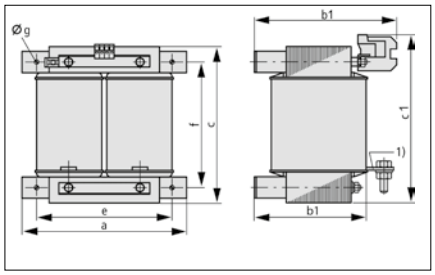

Fig. 2

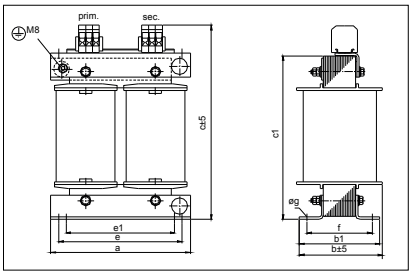

Fig. 3

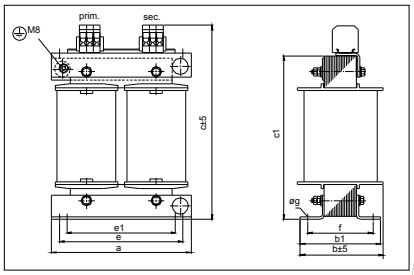

Fig. 4

Type	Total weight	No-load losses	Short-circuit losses [1]	Short-circuit voltage	Effi-ciency	a	b	c	b	c	b	c	b	c	b	c	e	f	ø g	b1	c1
	kg	W	W	%			12 V		24 V		42 V		110 V		230 V						
Fig 1																					
ETSP0,03	0.7	4	4	*)	0.79	66	62	80	62	80	62	80	62	80	62	80	50	44	4,8x8	55	60
ETSP0,06	0.8	5	7	*)	0.83	66	74	80	74	80	74	80	74	80	74	80	50	56	4,8x8	67	60
ETSP0,1	1.5	6	9	*)	0.87	85	68	91	68	91	68	91	68	91	68	91	64	47	4,8x8	60	76
ETSP0,16	2	8	10	*)	0.9	85	82	91	82	91	82	91	82	91	82	91	64	61	4,8x8	74	76
ETSP0,2	2.3	10	10	*)	0.91	85	91	91	91	91	91	91	91	91	91	91	64	70	4,8x8	83	76
ETSP0,25	3	10	15	*)	0.91	106	82	112	82	112	82	112	82	112	82	112	80	61	5,8x12	80	97
ETSP0,315	3.8	10	15	*)	0.93	106	90	112	90	112	90	112	90	112	90	112	80	70	5,8x12	89	97
ETSP0,4	4.3	12	19	*)	0.93	121	88	119	88	119	88	119	88	119	88	119	90	68	5,8x12	86	106
ETSP0,5	5.2	16	19	*)	0.93	121	121	133	100	119	100	119	100	119	100	119	90	80	5,8x12	98	106
ETSP0,63	6.8	19	19	*)	0.94	121	141	133	120	119	120	119	120	119	120	119	90	100	5,8x12	118	106
ETSP0,8	7.7	27	26	*)	0.94	151	107	211	107	145	107	145	107	145	107	145	122	82	7x15	104	132
ETSP1,0	9.6	35	29	*)	0.94	151	124	211	145	159	124	145	124	145	124	145	122	99	7x15	121	132
ETSP1,3	13.4	46	29	*)	0.95	151	150	211	171	159	150	145	150	145	150	145	122	125	7x15	147	132
ETSP1,6	14.9	40	30	*)	0.96	175	138	240	138	240	159	170	138	157	138	157	135	110	7x15	136	152
ETSP2,0	20	51	35	*)	0.96	175	200	157	168	240	190	170	168	157	168	157	135	141	7x15	167	152
Fig 2																					
ETSP2,5	21	23	71	*)	0.96	230	185	255	215	275	160	275	150	255	150	255	190	200	11	130	250
ETSP3,0	26	28	77	*)	0.97	230	210	255	240	275	240	275	175	255	175	255	190	200	11	155	250
ETSP4,0	32	36	74	*)	0.97	230	225	255	210	255	255	275	200	275	190	255	190	200	11	170	250
ETSP5,0	35	46	101	*)	0.97	230	235	255	235	255	265	275	210	275	200	255	190	200	11	180	250

All dimensions in mm

Type	Total weight	No-load losses	Short-circuit losses [1]	Short-circuit voltage	Efficiency	a	b*	b1	c	c1	e	e1	f	øg1	øg2
	kg	W	W	%											
Fig 3															
ETSP6,3	40	52	130	1)	0.97	260	185	152	400	310	230	-	126	10 x 18	-
ETFSP8,3	75	60	250	1)	0.96	320	233	173	435	370	270	-	143	13 x 20	-
ETFSP10	80	80	300	1)	0.96	320	248	188	435	370	270	-	158	13 x 20	-
ETFSP13	95	85	280	1)	0.97	320	263	203	435	370	270	-	173	13 x 20	-
ETFSP16	100	90	380	1)	0.97	370	250	190	485	420	320	270	160	13 x 20	13 x 20
ETFSP21	120	115	450	1)	0.97	370	277	217	485	420	320	270	187	13 x 20	13 x 20
ETFSP25	140	150	530	1)	0.97	370	307	247	485	420	320	270	217	13 x 20	13 x 20
Fig 4															
ETFSP33	180	160	540	1)	0.98	460	370	280	561	497	400	330	220	14	12
ETFSP40	190	200	825	1)	0.97	460	400	310	561	497	400	330	250	14	12
ETFSP53	220	180	1260	1)	0.97	480	350	260	706	642	400	-	200	14	-
ETFSP67	260	235	1580	1)	0.97	480	380	290	706	642	400	-	230	14	-

[1] depending on the voltage ratio

*External dimension for lug: ETF8,3-ETF25 +60mm for lug (already included)
*External dimension for lug: ETF33-ETF67 +90mm for lug (already included)

Designed and tested to
- IEC/EN 61558-2-2 / 2-4 / 2-6
- UL 5085-2
- CSA 22.2 No. 66

For use according to
- IEC/EN 60204-1

Typical applications
- Control circuits
- Protective seperation
- Protective separation SELV circuit (Separated extra-low voltage)
- FELV circuit (Functional extra-low voltage)

Basic equipment
- Separate windings
- Insulation class B
- Ambient temperature –25 to 40 °C
- Connection by terminals (<=115 A)
- Frequency 50/60 Hz

Rated output	Short time rating	Rated input voltage	Rated output voltage	Type Order no.	Cu factor [1]
kVA	kVA	V	V		
0.1	0.24	208 230	2 x 115	**UTI0,1-115** 4001708	0.30
0.2	0.45	380 400		**UTI0,2-115** 4001709	0.70
0.315	0.83	415 440		**UTI0,315-115** 4001710	1.10
0.5	1.5	460 480		**UTI0,5-115** 4001711	1.30
0.63	1.6	500 525		**UTI0,63-115** 4001712	2.10
0.8	2.5	550 575		**UTI0,8-115** 4001713	2.30
1	3.7	600		**UTI1,0-115** 4001714	3.00
0.1	0.24		1 x 24	**UTI0,1-24** 4003509	0.30
0.2	0.45			**UTI0,2-24** 4003450	0.70
0.315	0.83			**UTI0,315-24** 4011506	1.10
0.5	1.5			**UTI0,5-24** 4004361	1.30
0.63	1.6			**UTI0,63-24** 4011507	2.10
0.8	2.5			**UTI0,8-24** 4011508	2.30
1	3.7			**UTI1,0-24** 4011509	3.00

[1] The method of calculation of the material price surcharge is explained in point 2.1 of our general terms and conditions

- CUR to UL file XPTQ2. or XPTQ8. E168819 (transformers, general purpose - component or transformers, general purpose certified for Canada - component, type testing)

Phone: +43 2689 2744 - 0 / Fax: +43 2689 2744 - 9 / info@trafomodern.com / www.trafomodern.com

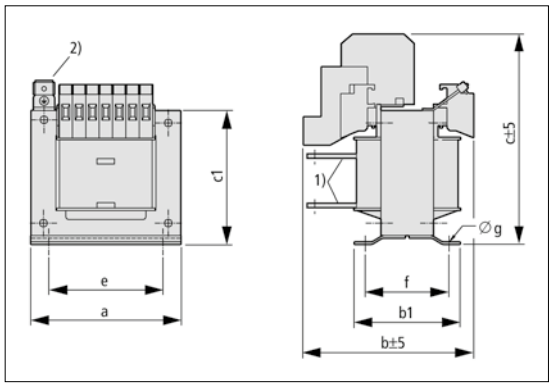

1) maximum space requirement
2) For type UTI0,1 earth connection faces downwards

Type	Total weight	No-load losses	Short-circuit losses 1)	Short-circuit voltage	Efficiency	a	b1	c1	b	c	b	c	e	f	ø g
	kg	W	W	%					Us = 24V		Us = 115V				
UTI0,1	2	8	11	7.5	0.84	85	74	76	89	93	89	93	64	61	4,8 x 8
UTI0,2	3	10	19	6.5	0.87	106	80	97	82	112	82	112	80	61	5,8 x 12
UTI0,315	4.3	15	23	5	0.89	121	86	106	88	124	88	124	90	68	5,8 x 12
UTI0,5	6.8	26	23	3.5	0.92	121	118	106	140	133	120	124	90	100	5,8 x 12
UTI0,63	7.7	25	32	3.8	0.92	151	104	132	122	159	107	150	122	82	7 x 15
UTI0,8	9.6	33	29	2.8	0.93	151	121	132	139	159	124	150	122	99	7 x 15
UTI1,0	13.4	46	30	2.1	0.93	151	147	132	165	159	150	150	122	125	7 x 15

All dimensions in mm

Circuits of multi winding transformers

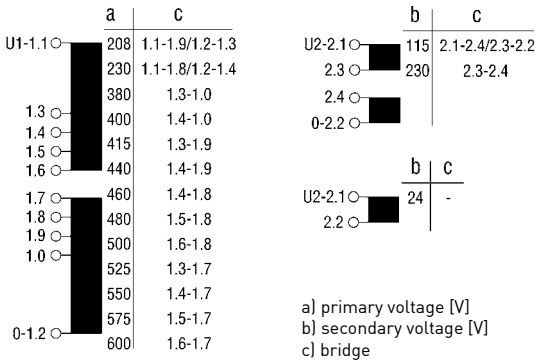

a) primary voltage [V]
b) secondary voltage [V]
c) bridge

Example:
If the transformer will be connected to a 460 V rated input voltage, bridge the terminals 1.4 and 1.8.
If the transformer will have a230 V rated output voltage, bridge the terminals 2.3 and 2.4.

Isolating transformers to EN 61558-2-4, double insulated, in a solid portable metalenclosure (metal-clad transformer of protectionclass II). Conditionally short-circuit-proof due to a built-in overcurrentprotection device operable from outside. On the input side the appliance is provided with a replaceable 1.8 m mainscable, with a moulded-on plug (up to TT2.3 - above TT2.3 fitted with a CEE plug), plastic cable gland with strain relief and kink protection; on the output side one socket with hinged lid (shockproof or CEE).

The appliances are not equipped with a PE terminal.
For industrial use only.

Technical data

- Primary: 230 V 50/60 Hz
- Secondary: 230 V
- Protection type: IP 42
- Insulation class: B
- Duty cycle: 100 %
- Installation altitude: 1000 above mean sea level
- Ambient temperature: 40 °C
- Paint finish: RAL 7032
- Mains cable: Attachment method X

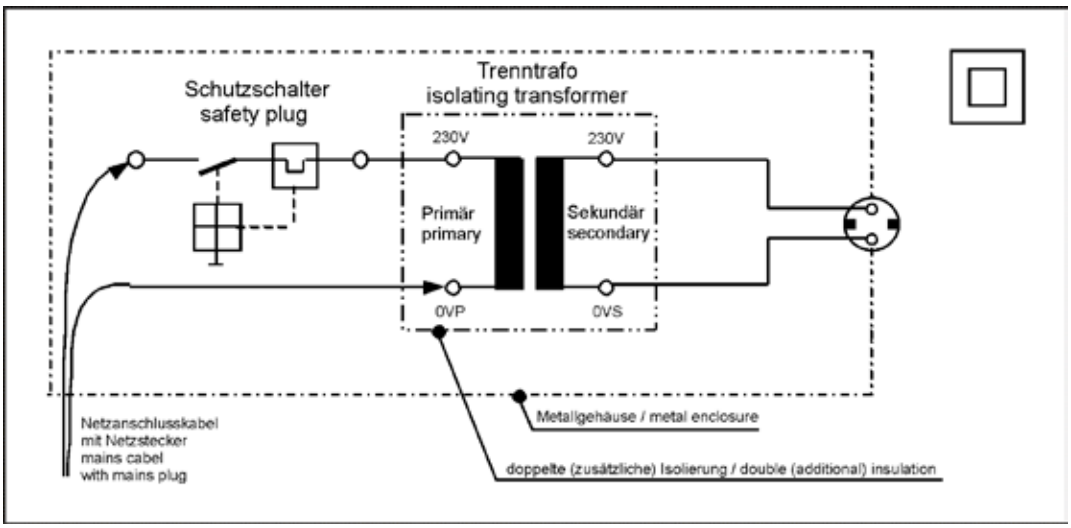

Schematic diagram Socket without PE terminal, or several sockets with equipotential bonding

Rated output	Rated input voltage	Rated output voltage	Current	Type Order no.	Cu factor [1]
kVA	V	V	A		
0.1	230	230	0.44	**TT 0,1 (230/230)** 4001758	0.32
0.2			0.87	**TT 0,2 (230/230)** 4001759	0.70
0.3			1.3	**TT 0,3 (230/230)** 4001760	1.00
0.5			2.17	**TT 0,5 (230/230)** 4001761	1.90
0.8			3.5	**TT 0,8 (230/230)** 4001762	2.45
1			4.33	**TT 1,0 (230/230)** 4001763	2.50
1.4			6	**TT 1,4 (230/230)** 4001764	4.40
2			8.7	**TT 2,0 (230/230)** 4001765	6.60
2.3			10	**TT 2,3 (230/230)** 4001766	6.80
2.8			12	**TT 2,8 (230/230)** 4001767	6.90
3			13	**TT 3,0 (230/230)** 4001768	7.20
3.7			16	**TT 3,7 (230/230)** 4001769	10.20

Other voltages available on request.

[1] The method of calculation of the material price surcharge is explained in point 2.1 of our general terms and conditions

Phone: +43 2689 2744 - 0 / Fax: +43 2689 2744 - 9 / info@trafomodern.com / www.trafomodern.com

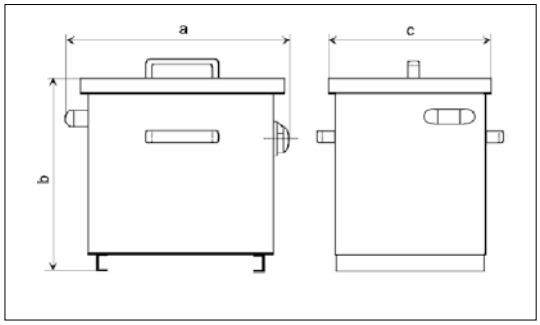

Type	Total weight	Total losses	Carrying handle	a	b	c
	kg	W				
TT 0,1	5.8	18	1 x on top	139	119	230
TT 0,2	7.0	24	1 x on top	139	119	230
TT 0,3	8.1	28	1 x on top	139	119	230
TT 0,5	12.2	37	1 x on top	169	144	245
TT 0,8	19.6	35	1 x on top	211	179	320
TT 1,0	23.4	42	1 x on top	211	179	320
TT 1,4	27.4	44	1 x on top	211	179	320
TT 2,0	34.0	51	1 x on top	211	179	320
TT 2,3	36.3	86	2 x lateral	270	308	314
TT 2,8	42.3	91	2 x lateral	270	308	314
TT 3,0	43.8	98	2 x lateral	270	308	314
TT 3,7	46.5	101	2 x lateral	270	308	314

All dimensions in mm

Designed and tested to
- IEC/EN 61558-2-2 / 2-4 / 2-6
- UL 5085-2
- CSA 22.2 No. 66

For use according to
- IEC/EN 60204-1

Typical applications
- Control circuits
- Protective separation
- SELV circuit
  (Separated extra-low voltage)
- FELV circuit
  (Functional extra-low voltage)

Basic equipment
- Separate windings
- Insulation class B
- Ambient temperature –25 to 40 °C
- Connection by terminals (<=115 A)
- Frequency 50/60 Hz
- ±5 % tapping on the primary side

Rated output	Short time rating	Rated input voltage	Rated output voltage	Type	Cu factor[1]
kVA	kVA	V (selectable)	V (selectable)		
0.1	0.2	200 ± 5 % 230 ± 5 %	18,5 24	**DTI0,1(*/*)***	0.55
0.16	0.32	400 ± 5 % 415 ± 5 %	42 110	**DTI0,16(*/*)***	0.70
0.25	0.5	440 ± 5 % 500 ± 5 %	200 230	**DTI0,25(*/*)***	1.00
0.4	0.8	690 ± 5 %	400	**DTI0,4(*/*)***	1.10
0.5	1			**DTI0,5(*/*)***	1.40
0.63	1.38			**DTI0,63(*/*)***	1.60
1	2.2			**DTI1,0(*/*)***	2.90
1.6	3.5			**DTI1,6(*/*)***	4.40
2	4.4			**DTI2,0(*/*)***	6.50
2.5	5.5			**DTI2,5(*/*)***	8.60
4	6.2			**DTI4,0(*/*)***	9.50
6.3	15.7			**DTI6,3(*/*)***	12.00

[1] The method of calculation of the material price surcharge is explained in point 2.1 of our general terms and conditions

- IEC/EN 61 558 allows transformers with rated output voltages 18.5 V to 42 V to be used as safety transformers.
- UL/CSA only up to 600 V (incl. tapping)
- CUR to UL file XPTQ2 or to XPTQ8. E168819 (transformers, general purpose - component or transformers, general purpose certified for Canada - component, type testing)

When ordering, the type designation must be extended by addition of the following data:

DTI0,1(*/*)
1st place holder ≙ rated input voltage
2nd place holder ≙ rated output voltage
3rd place holder ≙ vector group

Sample order
- requested type DTI0,1
- requested rated input voltage 200 V
- requested rated output voltage 18,5 V
- requested vector group Dy(n)5

The correct type designation reads
DTI0,1(200/18,5)Dy(n)5

For more information about configuration of three-phase transformers see page 61.

The unique article number for your configuration will be defined by trafomodern during the quotation and ordering process.

Phone: +43 2689 2744 - 0 | Fax: +43 2689 2744 - 9 | info@trafomodern.com | www.trafomodern.com

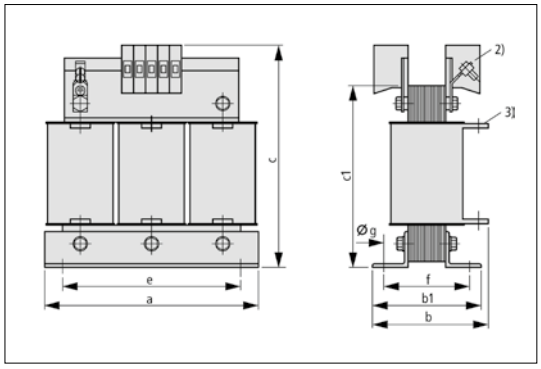

1) The dimensions for the higher rated voltage are applicable
2) Terminals < 25 A
3) Connection lugs > 63 A

Type	Total weight	No-load losses	Short-circuit losses 1)	Short-circuit voltage	Efficiency	a	b	c	b	c	b	c	b	c	b	c	e	f	ø g	b1	c1
	kg	W	W	%			18,5 V		24 V		42 V		110 V		230 V						
DTI0,1	1.9	5	28	15	0.75	125	65	134	65	134	65	134	65	134	65	134	100	45	5 x 8	61	102
DTI0,16	2.5	8	20	9.5	0.85	125	75	134	75	134	75	134	75	134	75	134	100	55	5 x 8	71	102
DTI0,25	3.6	11	25	8.5	0.88	155	77	154	77	154	77	154	77	154	77	154	130	57	8 x 12	77	128
DTI0,4	5.1	15	40	8	0.88	155	92	154	92	154	92	154	92	154	92	154	130	72	8 x 12	92	128
DTI0,5	6.1	20	35	6	0.9	190	82	180	112	191	82	180	82	180	82	180	170	58	8 x 12	82	155
DTI0,63	8.9	25	50	5.5	0.9	190	102	180	132	191	102	180	102	180	102	180	170	78	8 x 12	102	155
DTI1,0	12.9	35	50	4	0.92	210	137	210	137	210	137	210	117	199	117	199	175	97	8 x 12	117	174
DTI1,6	18.5	55	60	3	0.93	230	144	234	114	269	144	234	114	223	114	223	176	95	7 x 13	114	198
DTI2,0	22.4	60	75	3.5	0.94	240	117	279	117	279	117	279	141	244	117	233	185	95	10 x 18	117	208
DTI2,5	29.3	80	85	2.5	0.94	265	132	299	132	299	132	299	152	264	132	253	200	102	10 x 18	132	228
DTI4,0	39.6	60	100	2	0.96	300	166	317	166	333	147	333	157	296	157	296	224	119	10 x 18	147	260
DTI6,3	50.2	58	170	2	0.96	300	193	285	210	285	193	333	173	333	173	296	224	145	10 x 18	173	260

All dimensions in mm

Designed and tested to
- IEC/EN 61558-2-2 / 2-4 / 2-6
- UL 5085-2
- CSA 22.2 No. 66

For use according to
- IEC/EN 60204-1

Typical applications
- Control circuits
- Protective separation
- SELV circuit (Separated extra-low voltage)
- FELV circuit (Functional extra-low voltage)

Basic equipment
- Separate windings
- Insulation class B / F from 8,0 kVA
- Ambient temperature –25 to 40 °C
- Connection by terminals (<=115 A)
- Frequency 50/60 Hz
- ±5 % tapping on the primary side

Further equipment
- IP23 enclosure page 50
- Additional tapping page 53
- Additional winding page 55
- Static shield winding page 53
- Tropicalised version page 53
- Temperature monitoring page 55

Rated output	Short time rating	Rated input voltage	Rated output voltage	Type	Cu factor[2]
kVA	kVA	V (selectable)	V (selectable)		
0.1	0.2	50-1000 ¬±5%	18,5-1000	**DTZ0,1(*/*)***	0.55
0.16	0.32			**DTZ0,16(*/*)***	0.70
0.25	0.5			**DTZ0,25(*/*)***	1.00
0.4	0.8			**DTZ0,4(*/*)***	1.10
0.5	1			**DTZ0,5(*/*)***	1.40
0.63	1.38			**DTZ0,63(*/*)***	1.60
1	2.2			**DTZ1,0(*/*)***	2.90
1.6	3.5			**DTZ1,6(*/*)***	4.40
2	4.4			**DTZ2,0(*/*)***	6.50
2.5	5.5			**DTZ2,5(*/*)***	8.60
4	6.2			**DTZ4,0(*/*)***	9.50
6.3	15.7			**DTZ6,3(*/*)***	12.00
8	20			**DTZ8,0(*/*)***	18.00
10	25			**DTZ10(*/*)***	30.00
12.5	31			**DTZ12(*/*)***	35.00
16	40			**DTZ16(*/*)***	37.00
20	50			**DTZ20(*/*)***	45.00
25	62			**DTZ25(*/*)***	75.00

- IEC/EN 61558 allows transformers with rated output voltages <= 50 V to be used as safety transformers.
- Tropicalised transformers are coated with a special insulating varnish
- UL/CSA only up to 600 V (incl. tapping).
- CUR to UL file XPTQ2.E168819 up to 6.3 kVA (transformers, general purpose component or transformers, general purpose certified for Canada - component, type testing)
- CUR to EIS 130 or EIS 155 to OBJY2. or OBJY8.E160829 (systems, electrical insulation component or systems, electrical insulation certified for Canada - component, insulation material system)

When ordering, the type designation must be extended by addition of the following data:

DTZ0,1(*/*)*
1st place holder ≙ rated input voltage
2nd place holder ≙ rated output voltage
3rd place holder ≙ vector group

Sample order
- requested type DTI0,1
- requested rated input voltage 200 V
- requested rated output voltage 36 V
- requested vector group Dy(n)5

The correct type designation reads
DTZ0,1(200/36)Dy(n)5

For more information about configuration of three-phase transformers see page 61.

The unique article number for your configuration will be defined by trafomodern during the quotation and ordering process.

[1] For additional charge for increased current see page 52
2] The method of calculation of the material price surcharge is explained in point 2.1 of our general terms and conditions

Phone: +43 2689 2744 - 0 / Fax: +43 2689 2744 - 9 / info@trafomodern.com / www.trafomodern.com

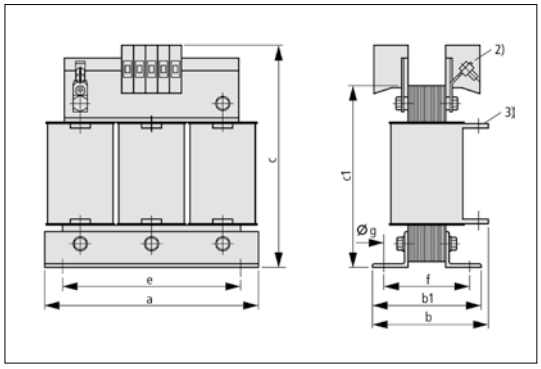

1) The dimensions for the higher rated voltage are applicable
2) Terminals < 25 A
3) Connection lugs > 63 A

Type	Total weight	No-load losses	Short-circuit losses1)	Short-circuit voltage	Effi-ciency	a	b	c	b	c	b	c	b	c	b	c	e	f	ø g	b1	c1
	kg	W	W	%			18,5 V		24 V		42 V		110 V		230 V						
DTZ0,1	1.9	5	28	15	0.75	125	65	134	65	134	65	134	65	134	65	134	100	45	5 x 8	61	102
DTZ0,16	2.5	8	20	9.5	0.85	125	75	134	75	134	75	134	75	134	75	134	100	55	5 x 8	71	102
DTZ0,25	3.6	11	25	8.5	0.88	155	77	154	77	154	77	154	77	154	77	154	130	57	8 x 12	77	128
DTZ0,4	5.1	15	40	8	0.88	155	92	154	92	154	92	154	92	154	92	154	130	72	8 x 12	92	128
DTZ0,5	6.1	20	35	6	0.9	190	82	180	112	191	82	180	82	180	82	180	170	58	8 x 12	82	155
DTZ0,63	8.9	25	50	5.5	0.9	190	102	180	132	191	102	180	102	180	102	180	170	78	8 x 12	102	155
DTZ1,0	12.9	35	50	4	0.92	210	137	210	137	210	137	210	117	199	117	199	175	97	8 x 12	117	174
DTZ1,6	18.5	55	60	3	0.93	230	144	234	114	269	144	234	114	223	114	223	176	95	7 x 13	114	198
DTZ2,0	22.4	60	75	3.5	0.94	240	117	279	117	279	117	279	141	244	117	233	185	95	10 x 18	117	208
DTZ2,5	29.3	80	85	2.5	0.94	265	132	299	132	299	132	299	152	264	132	253	200	102	10 x 18	132	228
DTZ4,0	39.6	60	100	2	0.96	300	166	317	166	333	147	333	157	296	157	296	224	119	10 x 18	147	260
DTZ6,3	50.2	66	170	2	0.96	300	193	285	210	285	193	333	173	333	173	296	224	145	10 x 18	173	260
DTZ8,0	55	60	250	4	0.96	390	200	1)	200	1)	200	1)	184	374	184	374	350	126	10 x 18	152	310
DTZ10,0	70	80	280	3.5	0.97	390	-	-	216	1)	216	1)	199	374	199	374	350	141	10 x 18	167	310
DTZ12,5	80	95	300	4	0.97	390	-	-	231	1)	231	1)	214	374	214	374	350	156	10 x 18	182	310
DTZ16	95	100	420	4.5	0.97	450	-	-	221	1)	221	1)	204	434	204	434	400	142	13 x 20	172	360
DTZ20	125	140	400	3.5	0.98	450	-	-	251	1)	251	1)	234	1)	234	434	400	172	13 x 20	202	360
DTZ25	160	180	350	3	0.98	450	-	-	281	1)	281	1)	264	1)	264	434	400	202	13 x 20	232	360

All dimensions in mm

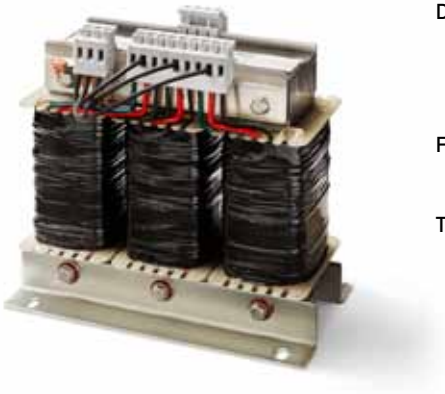

Designed and tested to
- IEC/EN 61558-2-1 / EN 60076-1
- UL 5085-2
- CSA 22.2 No. 66

For use according to
- IEC/EN 60204-1

Typical applications
- Voltage adjustment
- Generation of four-wire networksbased on three-wire networks
- Power transfer

Basic equipment
- Separate windings
- Insulation class B / F from 6,3 kVA
- Ambient temperature –25 to 40 °C
- Connection by terminals (<=115 A)
- Frequency 50/60 Hz

Further equipment
- IP23 enclosure page 50
- Additional tapping page 53
- Additional winding page 55
- Static shield winding page 53
- Tropicalised version page 53
- Temperature monitoring page 55

Rated output for use according to insulation class [1]		Rated input voltage	Rated output voltage	Type	Cu factor [3]
B kVA	F kVA	V (selectable)	V (selectable)		
0.1	-	50-1000	12-1000	**DT0,1(*/*)***	0.45
0.16	-			**DT0,16(*/*)***	0.77
0.25	-			**DT0,25(*/*)***	1.00
0.4	-			**DT0,4(*/*)***	1.60
0.5	-			**DT0,5(*/*)***	1.85
0.63	-			**DT0,63(*/*)***	2.60
0.8	-			**DT0,8(*/*)***	2.60
1	-			**DT1,0(*/*)***	3.50
1.3	-		24-1000	**DT1,3(*/*)***	4.00
1.6	-			**DT1,6(*/*)***	5.00
2	-			**DT2,0(*/*)***	6.30
2.5	-			**DT2,5(*/*)***	7.00
3.2	-			**DT3,2(*/*)***	10.50
4	-			**DT4,0(*/*)***	11.00
5	-			**DT5,0(*/*)***	13.00
6.3	-			**DT6,3(*/*)***	15.00
8	9			**DT8,0(*/*)***	16.00
10	11.2			**DT10(*/*)***	27.00

- Static shield winding means there is additional shielding between primary and secondary sides
- Tropicalised transformers are coated with a special insulating varnish This varnish allows the transformer to be used in areas of high humidity.
- Transformer version with reinforced insulation available on request..
- CUR to UL file XPTQ2.E168819 up to 6.3 kVA (transformers, general purpose component or transformers, general purpose certified for Canada - component, type testing)
- CUR to EIS 130 or EIS 155 to OBJY2. or OBJY8.E160829 (systems, electrical insulation component or systems, electrical insulation certified for Canada - component, insulation material system)

When ordering, the type designation must be extended by addition of the following data:

DT0,1(*/*)*
1st place holder ≙ rated input voltage
2nd place holder ≙ rated output voltage
3rd place holder ≙ vector group

Sample order
- requested type DT0,1
- requested type DT0,1
- requested rated input voltage 1000 V
- requested rated output voltage 12 V
- requested vector group Dy(n)5

The correct type designation reads
DT0,1(1000/12)Dy(n)5

Higher outputs available on request.

The unique article number for your configuration will be defined by trafomodern during the quotation and ordering process.

1) Rated operating output is at max. 130 °C if the insulation is class B; at max. 155 °C if the insulation is class F
2) For additional charge for increased current see page 52
3) The method of calculation of the material price surcharge is explained in point 2.1 of our general terms and conditions
4) Only on request

Phone: +43 2689 2744 - 0 / Fax: +43 2689 2744 - 9 / info@trafomodern.com / www.trafomodern.com

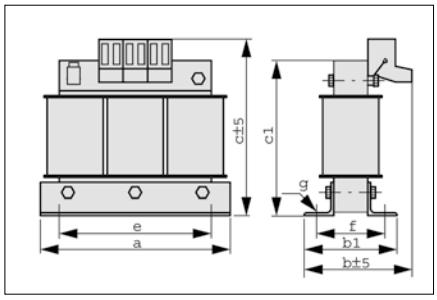

Fig. 1

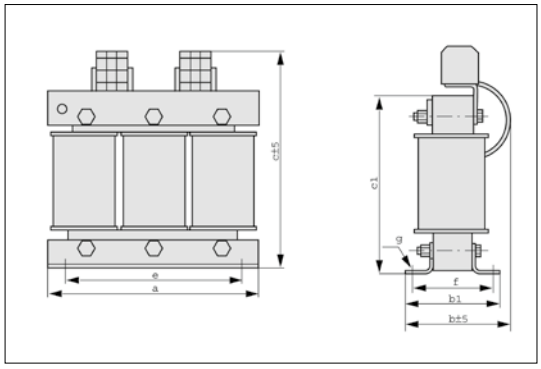

Fig. 2

Type	Total weight	No-load losses	Short-circuit losses[1]	Short-circuit voltage	Efficiency	a	b	b1	c	c1	e	f	ø g
	kg	W	W	%									
Fig 1													
DT0,1	0.9	5	18	14.8	0.81	105	91	66	128	82	80	50	5 x 8
DT0,16	1.9	6	30	15.5	0.82	125	86	61	148	102	100	45	5 x 8
DT0,25	2.5	9	35	10.9	0.85	125	96	71	148	102	100	55	5 x 8
DT0,4	3.6	11	45	10.1	0.88	155	97	77	168	128	130	57	8 x 12
DT0,5	5.1	17	40	6.7	0.9	155	112	92	168	128	130	72	8 x 12
DT0,63	6.1	19	50	7	0.9	190	102	82	194	155	170	58	8 x 12
DT0,8	7.5	25	50	5.8	0.91	190	112	92	194	155	170	68	8 x 12
DT1,0	8.9	35	55	5.1	0.92	190	122	102	194	155	170	78	8 x 12
DT1,3	11	35	70	5.1	0.93	210	122	107	213	174	175	87	8 x 12
DT1,6	12.9	45	70	4.1	0.93	210	132	117	213	174	175	97	8 x 12
DT2,0	20.1	55	85	3.9	0.93	240	124	107	247	208	185	85	10 x 18
DT2,5	22.4	65	95	3.6	0.94	240	134	117	247	208	185	95	10 x 18
DT3,2	27.7	30	135	4.2	0.94	300	116	106	296	260	224	78	10 x 18
DT4,0	31	35	130	3.2	0.96	300	132	122	296	260	224	94	10 x 18
DT5,0	39.6	75	145	2.5	0.97	300	157	147	296	260	224	119	10 x 18
Fig 2													
DT6,3	45	80	145	2	0.97	300	193	162	334	260	224	134	10 x 18
DT8,0	55	50	215	4.2	0.97	390	184	152	384	310	350	126	10 x 18
DT10	70	55	280	3.5	0.97	390	199	167	384	310	350	141	10 x 18

All dimensions in mm

Designed and tested to
- IEC/EN 61558-2-1 / EN 60076-11

For use according to
- IEC/EN 60204-1

Typical applications
- Voltage adjustment
- Generation of four-wire networksbased on three-wire networks
- Power transfer

Basic equipment
- Separate windings
- Insulation class F
- Ambient temperature –25 to 40 °C
- Connection by terminals (<=115 A)
- Frequency 50/60 Hz

Further equipment
- IP23 enclosure page 50
- Additional tapping page 53
- Additional winding page 55
- Static shield winding page 53
- Temperature monitoring page 55

4)

Rated output for use according to insulation class 1)		Rated input voltage	Rated output voltage	Type	Cu factor 3)
B kVA	F kVA	V (selectable)	V (selectable)		
12.5	15	50-1000	50-1000	DTF12,5(*/*)*	28
16	19			DTF16(*/*)*	30
20	22.5			DTF20(*/*)*	48
25	30			DTF25(*/*)*	50
32	37			DTF32(*/*)*	52
40	46			DTF40*/*)*	55
50	57.5			DTF50(*/*)*	75
63	73.5			DTF63(*/*)*	80
80	89.5			DTF80(*/*)*	110
100	111.5			DTF100(*/*)*	100
125	150			DTF125(*/*)*	115
160	180			DTF160(*/*)*	120
200	225			DTF200(*/*)*	180
250	280			DTF250(*/*)*	180
315	360			DTF315(*/*)*	195
400	450			DTF400(*/*)*	300
500	580			DTF500(*/*)*	360

1) Rated operating output is at max. 130 °C if the insulation is class B; at max. 155 °C if the insulation is class F
2) For additional charge for increased current see page 52
3) The method of calculation of the material price surcharge is explained in point 2.1 of our general terms and conditions
4) Only on request
5) For more information about configuration ofthree-phase transformers see page 61

- Static shield winding means there is additional shielding between primary and secondary sides
- Tropicalised transformers are coated with a special insulating varnish. This varnish allows the transformer to be used in areas of high humidity.
- Transformer version with reinforced insulation available on request.
- CUR to EIS 130 or EIS 155 to OBJY2. or OBJY8.E160829 (systems, electrical insulation component or systems, electrical insulation certified for Canada - component, insulation material system)

When ordering, the type designation must be extended by addition of the following data:

DTF100(*/*)*
1st place holder ≙ rated input voltage
2nd place holder ≙ rated output voltage
3rd place holder ≙ vector group

Sample order
- requested type DTF100
- requested rated input voltage 690 V
- requested rated output voltage 400 V
- requested vector group Ynyn0

The correct type designation reads
DTF100 (690/400) Ynyn0

Higher outputs available on request.

The unique article number for your configuration will be defined by trafomodern during the quotation and ordering process.

Phone: +43 2689 2744 - 0 / Fax: +43 2689 2744 - 9 / info@trafomodern.com / www.trafomodern.com

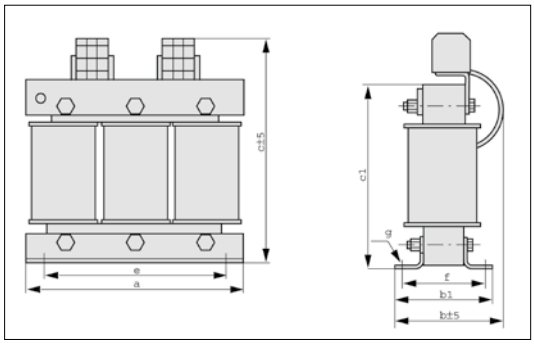

Fig. 1

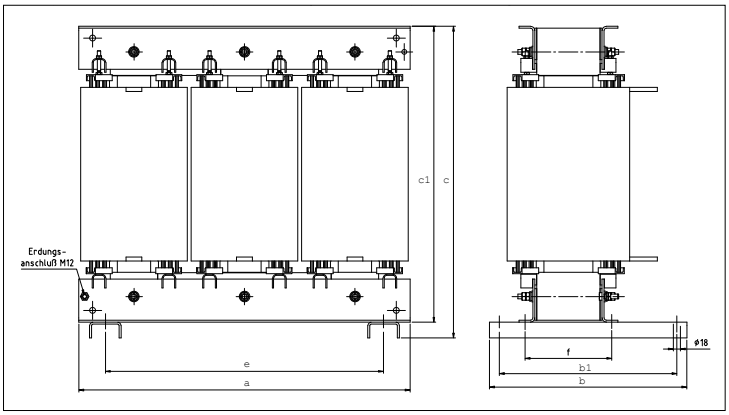

Fig. 2

Type	Total weight	No-load losses	Short-* circuit losses	Short-circuit voltage	Efficiency	a	b	b1	c	c1	e	f	ø g
	kg	W	W	%									
Fig.1													
DTF12,5	80	85	380	2.7	0.96	450	204	173	434	360	400	143	13 x 20
DTF16	90	110	400	2.1	0.97	450	219	187	434	360	400	157	13 x 20
DTF20	117	120	410	1.8	0.97	450	234	203	434	360	400	173	13 x 20
DTF25	140	140	580	3.8	0.97	540	-	240	517	-	450	170	14 x 20
DTF32	155	180	700	3.2	0.97	540	-	267	517	-	450	197	14 x 20
DTF40	185	230	700	2.6	0.97	540	-	297	517	-	450	227	14 x 20
DTF50	245	260	850	2.8	0.97	690	-	280	572	-	575	230	14 x 20
DTF63	280	320	1260	3.1	0.97	690	-	310	572	-	575	260	14 x 20
DTF80	330	290	1890	3.8	0.97	760	-	260	720	-	575	200	14 x 20
DTF100	345	380	2380	3.8	0.97	760	-	290	720	-	575	230	14 x 20
DTF125	450	460	2600	3.3	0.98	760	-	330	720	-	575	270	14 x 20
Fig.2													
DTF160	550	650	3650	3.1	0.98	840	500	450	790	750	705	220	18
DTF200	620	700	4000	3.5	0.98	840	500	450	790	750	705	220	18
DTF250	730	860	4700	3.2	0.98	840	500	450	790	750	705	270	18
DTF315	980	1200	6350	3.3	0.98	1020	500	450	970	930	705	260	18
DTF400	1100	1300	6400	3.7	0.98	1020	500	450	970	930	705	260	18
DTF500	1380	1780	5850	2.6	0.98	1020	500	450	970	930	705	320	18

* the specified short-circuit losses are heat losses

All dimensions in mm

D4TB, D4TF

THREE-PHASE TRANSFORMERS WITH 4% U_K

Designed and tested to
- IEC/EN 61558-2-1 / EN 60076-11

Typical applications
- Inverter applications

Basic equipment
- Separate windings
- Insulation class B / F from 25 kVA
- Ambient temperature –25 to 40 °C
- Connection by terminals (<=115 A)
- Frequency 50/60 Hz

Further equipment
- IP23 enclosure page 50
- Additional tapping page 53
- Additional winding page 55
- Static shield winding page 53
- Temperature monitoring page 55

4)

Rated output for use according to insulation class [1]		Rated input voltage	Rated output voltage	Type	Cu factor [3]
B kVA	F kVA	V (selectable)	V (selectable)		
4.0	-	50-1000	50-1000	**D4TB4,0(*/*)***	15.00
5.0	-			**D4TB5,0(*/*)***	11.90
6.3	-			**D4TB6,3(*/*)***	10.00
8.0	-			**D4TB8,0(*/*)***	11.00
10	-			**D4TB10(*/*)***	13.50
12.5	-			**D4TB12,5(*/*)***	14.90
16	-			**D4TB16(*/*)***	26.40
20	-			**D4TB20(*/*)***	38.30
-	25			**D4TF25(*/*)***	38.50
-	32			**D4TF32(*/*)***	39.50
-	40			**D4TF40(*/*)***	51.00
-	50			**D4TF50(*/*)***	72.80
-	63			**D4TF63(*/*)***	61.40
-	80			**D4TF80(*/*)***	110.00
-	100			**D4TF100(*/*)***	120.00

1) Rated operating output is at max. 130 °C if the insulation is class B; at max. 155 °C if the insulation is class F
2) For additional charge for increased current see page 52
3) The method of calculation of the material price surcharge is explained in point 2.1 of our general terms and conditions
4) Only on request
5) For more information about configuration ofthree-phase transformers see page 61

- Static shield winding means there is additional shielding between primary and secondary sides
- Tropicalised transformers are coated with a special insulating varnish. This varnish allows the transformer to be used in areas of high humidity.
- Transformer version with reinforced insulation available on request.
- CUR to EIS 130 or EIS 155 to OBJY2. or OBJY8.E160829 (systems, electrical insulation component or systems, electrical insulation certified for Canada - component, insulation material system)

When ordering, the type designation must be extended by addition of the following data:

D4TF(*/*)*
1st place holder≙ rated input voltage
2nd place holder ≙ rated output voltage
3rd place holder ≙ vector group

Sample order
requested type D4TB20
- requested rated input voltage 400 V
- requested rated output voltage 320 V
- requested vector group Yd5

The correct type designation reads
D4TB20 (400/320) Yd5

The unique article number for your configuration will be defined by trafomodern during the quotation and ordering process.

Higher outputs available on request.

Phone: +43 2689 2744 - 0 / Fax: +43 2689 2744 - 9 / info@trafomodern.com / www.trafomodern.com

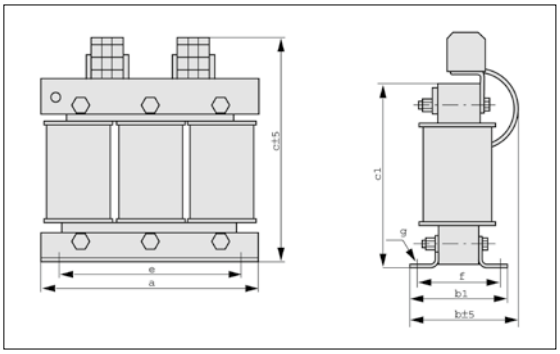

Type	Total weight	No-load losses	Short-circuit losses [1]	Short-circuit voltage	Efficiency	a	b	b1	c	c1	e	f	ø g
	kg	W	W	%									
D4TB4,0	31	45	210	≥4	0.88	300	154	147	290	260	224	119	10 x 18
D4TB5,0	45	40	270	≥4	0.9	300	193	162	334	260	224	134	10 x 18
D4TB6,3	55	60	315	≥4	0.9	390	184	152	384	310	350	126	10 x 18
D4TB8,0	70	75	340	≥4	0.91	390	199	167	384	310	350	141	10 x 18
D4TB10	95	95	505	≥4	0.92	450	204	172	434	360	400	142	13 x 20
D4TB12,5	95	95	490	≥4	0.96	450	204	172	434	360	400	142	13 x 20
D4TB16	115	120	650	≥4	0.97	450	264	232	434	360	400	202	13 x 20
D4TB20	150	130	720	≥4	0.97	540	267	-	496	-	450	197	14 x 20

Dimensional drawings for D4TF25,0 to D4TF100 available on request

All dimensions in mm

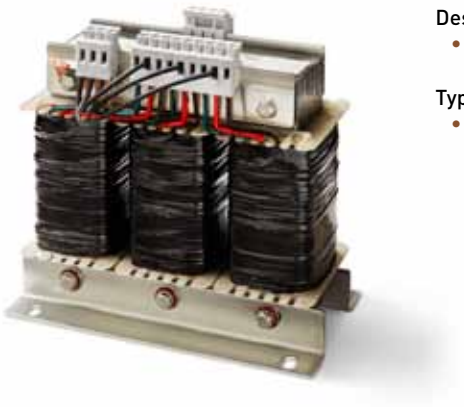

Designed and tested to
- IEC/EN 61558-2-13 / EN 60076-11

Typical applications
- Voltage adjustment

Basic equipment
- Insulation class B / F from 6.3 kVA
- Ambient temperature –25 to 40 °C
- Connection by terminals (<=115 A)
- Frequency 50/60 Hz
- Vector group Yna0
- Maximum load on the neutral point: 10 % of the rated current

Further equipment

• IP23 enclosure	page 50
• Additional tapping	page 53
• Additional winding	page 55
• Temperature monitoring	page 55
• Delta-connected stabilizing winding	on request

Rated output for use according to insulation class [1]		Rated input voltage	Rated output voltage	Type	Cu factor [3]
B kVA	F kVA	V (selectable)	V (selectable)		
0.1	-	50-1000	12-1000	DTSP0,1(*/*)	0.45
0.16	-			DTSP0,16(*/*)	0.77
0.25	-			DTSP0,25(*/*)	1.00
0.4	-			DTSP0,4(*/*)	1.60
0.5	-			DTSP0,5(*/*)	1.85
0.63	-			DTSP0,63(*/*)	2.60
0.8	-			DTSP0,8(*/*)	2.60
1	-			DTSP1,0(*/*)	3.50
1.3	-		24-1000	DTSP1,3(*/*)	4.00
1.6	-			DTSP1,6(*/*)	5.00
2	-			DTSP2,0(*/*)	6.30
2.5	-			DTSP2,5(*/*)	7.00
3.2	-			DTSP3,2(*/*)	10.50
4	-			DTSP4,0(*/*)	11.00
5	5.6			DTSP5,0(*/*)	13.00
6.3	7.1			DTSP6,3(*/*)	15.00
8	9			DTSP8,0(*/*)	16.00
10	11.2			DTSP10(*/*)	27.00

- Tropicalised transformers are coated with a special insulating varnish This varnish allows the transformer to be used in areas of high humidity.
- CUR to EIS 130 or EIS 155 to OBJY2. or OBJY8.E160829 (systems, electrical insulation component or systems, electrical insulation certified for Canada - component, insulation material system)

When ordering, the type designation must be extended by addition of the following data:

DTSP10(*/*)
1st place holder ≙ rated input voltage
2nd place holder ≙ rated output voltage

Sample order
- required throughput rating 22 kVA
- requested rated input voltage 690 V
- requested rated output voltage 400 V

Notes for selection
$S_T = S_N \cdot (1$ - undervoltage/overvoltage)
= 22 kVA (1 - 400 V/690 V) = 9,25 kVA
S_T = Type rated output
S_N = Throughput rating = rated output
- The type rated output is always less than the throughput rating.
- Versions with delta stabilising winding available onrequest.

The correct type designation reads
DTSP10(690/400)

The unique article number for your configuration will be defined by trafomodern during the quotation and ordering process.

[1] Rated operating output is at max. 130 °C if the insulation is class B; at max. 155 °C if the insulation is class F
[2] For additional charge for increased current see page 52
[3] The method of calculation of the material price surcharge is explained in point 2.1 of our general terms and conditions
[4] Only on request

Phone: +43 2689 2744 - 0 / Fax: +43 2689 2744 - 9 / info@trafomodern.com / www.trafomodern.com

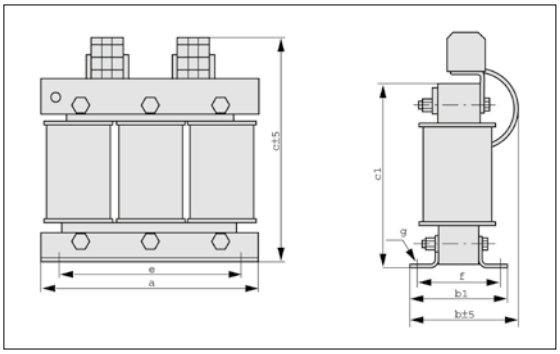

Type	Total weight	No-load losses	Short-circuit losses 1)	Short-circuit voltage	Efficiency	a	b	b1	c	c1	e	f	ø g
	kg	W	W	%									
DTSP 0,1	0.9	5	18	*)	0.81	105	91	66	128	82	80	50	5 x 8
DTSP 0,16	1.9	6	30	*)	0.82	125	86	61	148	102	100	45	5 x 8
DTSP 0,25	2.5	9	35	*)	0.85	125	96	71	148	102	100	55	5 x 8
DTSP 0,4	3.6	11	45	*)	0.88	155	97	77	168	128	130	57	8 x 12
DTSP 0,5	5.1	17	40	*)	0.9	155	112	92	168	128	130	72	8 x 12
DTSP 0,63	6.1	19	50	*)	0.9	190	102	82	194	155	170	58	8 x 12
DTSP 0,8	7.5	25	50	*)	0.91	190	112	92	194	155	170	68	8 x 12
DTSP 1,0	8.9	35	55	*)	0.92	190	122	102	194	155	170	78	8 x 12
DTSP 1,3	11	35	70	*)	0.93	210	122	107	213	174	175	87	8 x 12
DTSP 1,6	12.9	45	70	*)	0.93	210	132	117	213	174	175	97	8 x 12
DTSP 2,0	20.1	55	85	*)	0.93	240	124	107	247	208	185	85	10 x 18
DTSP 2,5	22.4	65	95	*)	0.94	240	134	117	247	208	185	95	10 x 18
DTSP 3,2	27.7	30	135	*)	0.94	300	116	106	296	260	224	78	10 x 18
DTSP 4,0	31	35	130	*)	0.96	300	132	122	296	260	224	94	10 x 18
DTSP 5,0	39.6	75	145	*)	0.97	300	157	147	296	260	224	119	10 x 18
DTSP 6,3	45	80	145	*)	0.97	300	193	162	334	260	224	134	10 x 18
DTSP 8,0	55	50	215	*)	0.97	390	184	152	384	310	350	126	10 x 18
DTSP 10	70	55	280	*)	0.97	390	199	167	384	310	350	141	10 x 18

*) depending on the voltage ratio

All dimensions in mm

Designed and tested to
- IEC/EN 61558-2-13 / EN 60076-11

Typical applications
- Voltage adjustment

Basic equipment
- Ambient temperature –25 to 40 °C
- Connection by terminals (<=115 A)
- Frequency 50/60 Hz
- Vector group Yna0
- Maximum load on the neutral point:
- 10 % of the rated current

Further equipment
- IP23 enclosure page 50
- Additional tapping page 53
- Additional winding page 55
- Temperature monitoring page 55

Rated output for use according to insulation class [1]		Rated input voltage	Rated output voltage	Type	Cu factor [3]
B kVA	F kVA	V (selectable)	V (selectable)		
12.5	15	50-1000	50-1000	**DTFSP12,5(*/*)**	28
16	19			**DTFSP16(*/*)**	30
20	22.5			**DTFSP20(*/*)**	48
25	30			**DTFSP25(*/*)**	50
32	37			**DTFSP32(*/*)**	52
40	46			**DTFSP40*/*)**	55
50	57.5			**DTFSP50(*/*)**	75
63	73.5			**DTFSP63(*/*)**	80
80	89.5			**DTFSP80(*/*)**	110
100	111.5			**DTFSP100(*/*)**	100
125	150			**DTFSP125(*/*)**	115
160	180			**DTFSP160(*/*)**	120
200	225			**DTFSP200(*/*)**	180
250	280			**DTFSP250(*/*)**	180
315	360			**DTFSP315(*/*)**	195
400	450			**DTFSP400(*/*)**	300
500	580			**DTFSP500(*/*)**	360

- Tropicalised transformers are coated with a special insulating varnish. This varnish allows the transformer to be used in areas of high humidity.
- CUR to EIS 130 or EIS 155 to OBJY2. or OBJY8.E160829 (systems, electrical insulation component or systems, electrical insulation certified for Canada - component, insulation material system)

When ordering, the type designation must be extended by addition of the following data:

DTFSP100(*/*)
1st place holder ≙ rated input voltage
2nd place holder ≙ rated output voltage

Sample order
- required throughput rating 220 kVA
- requested rated input voltage 690 V
- requested rated output voltage 400 V

Hinweise zur Auswahl
$S_T = S_N \cdot$ (1 - undervoltage/overvoltage)
= 220 kVA (1 - 400 V/690 V) = 92,5 kVA
S_T = Type rated output
S_N = Throughput rating = rated output
- The type rated output is always less than the throughput rating.
- Versions with delta stabilising winding available onrequest.

The correct type designation reads
DTFSP100(690/400)

The unique article number for your configuration will be defined by trafomodern during the quotation and ordering process.

[1] Rated operating output is
at max. 130 °C if the insulation is class B;
at max. 155 °C if the insulation is class F
[2] For additional charge for increased current see page 52
[3] The method of calculation of the material price surcharge is explained in point 2.1 of our general terms and conditions
[4] Only on request

Phone: +43 2689 2744 - 0 / Fax: +43 2689 2744 - 9 / info@trafomodern.com / www.trafomodern.com

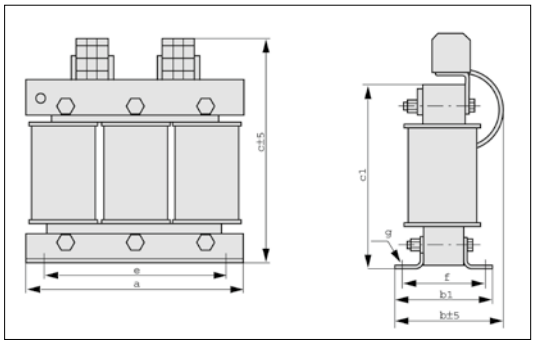

Fig. 1

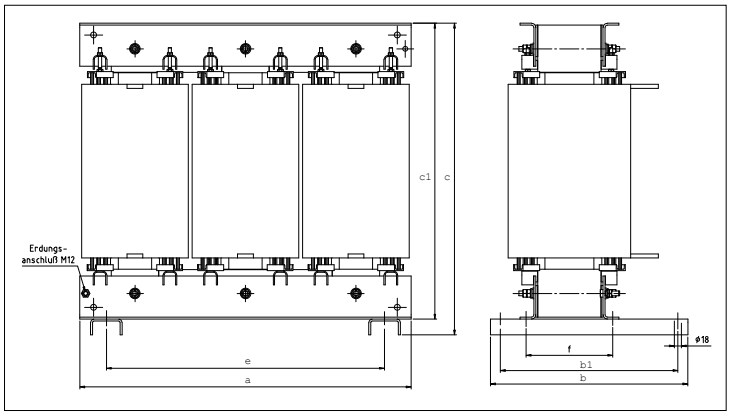

Fig. 2

Type	Total weight	No-load losses	Short-* circuit losses	Short-circuit voltage	Efficiency	a	b	b1	c	c1	e	f	ø g
	kg	W	W	%									
Fig.1													
DTFSP12,5	80	85	380	*)	0.96	450	204	173	434	360	400	143	13 x 20
DTFSP16	90	110	400	*)	0.97	450	219	187	434	360	400	157	13 x 20
DTFSP20	117	120	410	*)	0.97	450	234	203	434	360	400	173	13 x 20
DTFSP25	140	140	580	*)	0.97	540	-	240	517	-	450	170	14 x 20
DTFSP32	155	180	700	*)	0.97	540	-	267	517	-	450	197	14 x 20
DTFSP40	185	230	700	*)	0.97	540	-	297	517	-	450	227	14 x 20
DTFSP50	245	260	850	*)	0.97	690	-	280	572	-	575	230	14 x 20
DTFSP63	280	320	1260	*)	0.97	690	-	310	572	-	575	260	14 x 20
DTFSP80	330	290	1890	*)	0.97	760	-	260	720	-	575	200	14 x 20
DTFSP100	345	380	2380	*)	0.97	760	-	290	720	-	575	230	14 x 20
DTFSP125	450	460	2600	*)	0.98	760	-	330	720	-	575	270	14 x 20
Fig.2													
DTFSP160	550	620	3650	*)	0.98	840	500	450	790	750	705	220	18
DTFSP200	620	700	4000	*)	0.98	840	500	450	790	750	705	220	18
DTFSP250	730	820	4700	*)	0.98	840	500	450	790	750	705	270	18
DTFSP315	980	1160	6350	*)	0.98	1020	500	450	970	930	705	260	18
DTFSP400	1100	1160	6400	*)	0.98	1020	500	450	970	930	705	260	18
DTFSP500	1380	1550	5850	*)	0.98	1020	500	450	970	930	705	320	18

*) depending on the voltage ratio

All dimensions in mm

DA

Designed and tested to
- IEC/EN61558-2-4/EN60076-11

Typical applications
- Matching transformer for Machine and system components

DACB

Designed and tested to
- EN 60076-1

Typical applications
- Matching transformer for Machine and system components

DANF

Designed and tested to
- IEC/EN61558-2-4/EN60076-11
- EN 55011

Typical applications
- Matching transformer for Machine and system components which do not comply with the European EMC regulations
- These transformers permit the CE mark to be applied thus facilitate system integration.

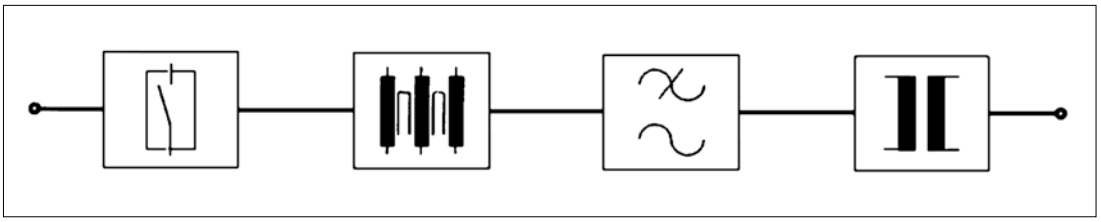

Schematic diagram DANF

DA advantages

- flexible voltage adjustment by primary tapping
- static shield winding between primary and secondary windings
- sheet steel protective enclosure IP33

DACB advantages:

- DACB advantages: flexible voltage adjustment by primary tapping
- static shield winding between primary and secondary windings
- sheet steel protective enclosure IP33
- circuit breaker for overload and short-circuit protection, giving full transformer protection, in a protective enclosure IP 55 to EN60204 Machines Directive

DANF advantages:

- flexible voltage adjustmen by primary tapping
- static shield winding between primary and secondary windings
- sheet steel protective enclosure IP33
- circuit breaker for overload and short-circuit protection, giving full transformer protection, in a protective enclosure IP 55 to EN60204 Machines Directive
- mains filter with an additional common mode choke for damping wire-bound interference

Technical data (for DA, DACB and DANF): :

Input voltage: 3 x 400 V with tappings for 380 V, 420 V
Output voltage: 3 x 200 V (other voltages available on request)
Frequency: 50 - 60 Hz
Insulation class: ta40F
Vector group: Yyn0
Protection type: Transformer IP33, terminal box IP55

Phone: +43 2689 2744 - 0 / Fax: +43 2689 2744 - 9 / info@trafomodern.com / www.trafomodern.com

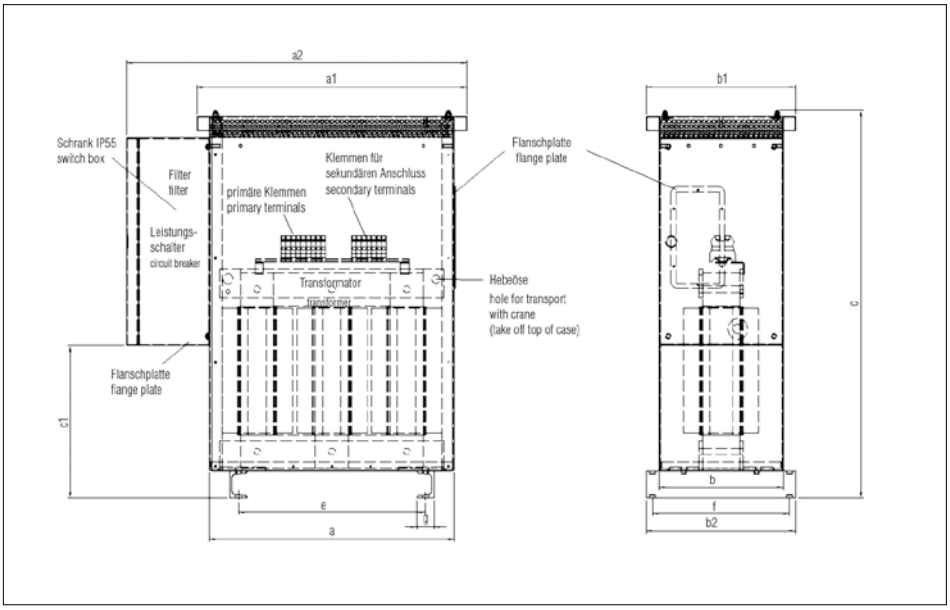

Type	Order no.	Total weight	Cu weight	Output	Output current	a	a1	a2	b	b1	b2	c	c1	e	f	ø g
		kg	kg	kVA	A											
DA 25	4000857	143	29	25	72	590	650	-	300	360	360	933	-	450	330	14
DA 35	4000858	169	40	35	101	590	650	-	300	360	360	933	-	450	330	14
DA 45	4000859	250	38	45	130	750	650	-	400	460	460	933	-	575	430	14
DA 55	4000860	280	49	55	159	750	810	-	400	460	460	933	-	575	430	14
DA 65	4000861	305	44	65	188	850	910	-	400	460	460	933	-	575	430	14
DA 75	4000862	340	60	75	217	850	910	-	400	460	460	933	-	575	430	14
DA 90	4000863	395	64	90	260	850	910	-	400	460	460	933	-	575	430	14
DA 110	4000914	400	102	110	317	850	930	-	500	580	550	1083	-	575	525	14
DA 130	4000915	470	97	130	375	850	930	-	500	580	550	1083	-	575	525	14
DA 150	4000916	700	97	150	433	1340	1510	-	800	970	920	1200	-	705	870	26
DACB 25	4000850	154	29	25	72	590	650	820	300	360	360	933	366	450	330	14
DACB 35	4000851	180	40	35	101	590	650	820	300	360	360	933	366	450	330	14
DACB 45	4000852	266	38	45	130	750	650	980	400	460	460	933	267	575	430	14
DACB 55	4000853	296	49	55	159	750	810	980	400	460	460	933	267	575	430	14
DACB 65	4000854	320	44	65	188	850	910	1080	400	460	460	933	267	575	430	14
DACB 75	4000855	355	60	75	217	850	910	1080	400	460	460	933	267	575	430	14
DACB 90	4000856	410	64	90	260	850	910	1080	400	460	460	933	267	575	430	14
DACB 110	4000921	425	102	110	317	850	930	1140	500	580	550	1083	317	575	525	14
DACB 130	4000922	495	97	130	375	850	930	1140	500	580	550	1083	317	575	525	14
DACB 150	4000923	725	97	150	433	1340	1510	1675	800	970	920	1200	327	705	870	26
DANF 25	4000283	158	29	25	72	590	650	820	300	360	360	933	366	450	330	14
DANF 35	4000284	184	40	35	101	590	650	820	300	360	360	933	366	450	330	14
DANF 45	4000285	275	38	45	130	750	650	980	400	460	460	933	267	575	430	14
DANF 55	4000286	305	49	55	159	750	810	980	400	460	460	933	267	575	430	14
DANF 65	4000287	330	44	65	188	850	910	1080	400	460	460	933	267	575	430	14
DANF 75	4000288	365	60	75	217	850	910	1080	400	460	460	933	267	575	430	14
DANF 90	4000289	420	64	90	260	850	910	1080	400	460	460	933	267	575	430	14
DANF 110	4000928	440	102	110	317	850	930	1140	500	580	550	1083	317	575	525	14
DANF 130	4000929	510	97	130	375	850	930	1140	500	580	550	1083	317	575	525	14
DANF 150	4000930	740	97	150	433	1340	1510	1675	800	970	920	1200	327	705	870	26

Special versions and higher outputs available on request

All dimensions in mm

Designed and tested to
- IEC/EN 61558-2-13 / EN 60076-11

Typical applications
- Generation of a synthetic neutral point with 230 V

Basic equipment
- Supply voltage 3 x 400 V
- Insulation class B
- Ambient temperature –25 to 40 °C
- Connection by terminals (<=115 A)
- Frequency 50/60 Hz
- Vector group Zn0

Further equipment
- IP23 enclosure page 50
- Temperature monitoring page 55

Neutral current	Rated output voltage	Type Order no.	Cu factor [1]
A	V		
5	230	**DSB0,67** 4000947	3.00
10		**DSB1,3** 4000948	5.00
25		**DSB3,3** 4000949	12.00
50		**DSB6,7** 4000950	20.00
75		**DSB10** 4000951	28.00
100		**DSB13,3** 4000952	30.00
150		**DSB20** 4000953	35.00
200		**DSB26,7** 4000954	48.00
250		**DSB33,3** 4000955	50.00
300		**DSB40** 4000956	56.00
350		**DSB46,7** 4000957	75.00
400		**DSB53,3** 4000958	80.00
450		**DSB60** 4000959	80.00
500		**DSB66,7** 4000960	80.00
600		**DSB80** 4000961	110.00
700		**DSB93,3** 4000962	100.00

[1] The method of calculation of the material price surcharge is explained in point 2.1 of our general terms and conditions

Phone: +43 2689 2744 - 0 / Fax: +43 2689 2744 - 9 / info@trafomodern.com / www.trafomodern.com

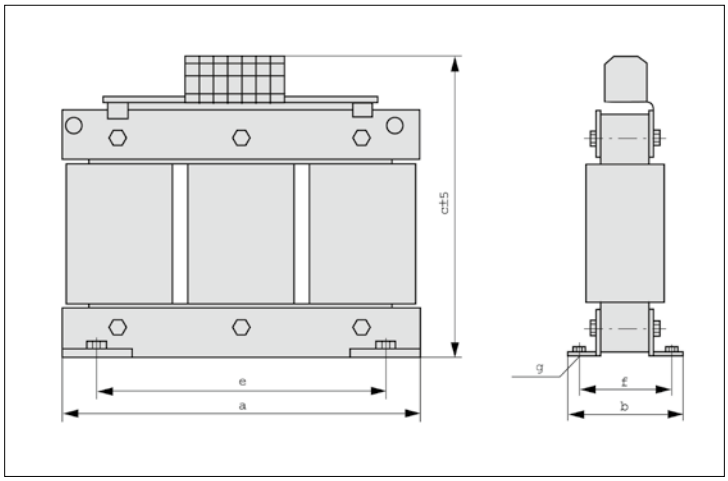

Type	Total weight	No-load losses	Short-circuit losses 1)	Short-circuit voltage	Efficiency	a	b	b1	c	c1	e	f	ø g
	kg	W	W	%									
DSB0,67	6.1	20	80	-	0.82	125	86	61	148	102	100	45	5 x 8
DSB1,3	11	35	100	-	0.93	210	122	107	213	174	175	87	8 x 12
DSB3,3	27.7	25	220	-	0.94	300	116	106	296	260	224	78	10 x 18
DSB6,7	45	65	200	-	0.97	300	193	162	334	260	224	134	10 x 18
DSB10	70	75	365	-	0.97	390	199	167	384	310	350	141	10 x 18
DSB13,3	80	95	455	-	0.97	390	204	173	434	310	400	143	13 x 20
DSB20	90	130	505	-	0.98	450	234	202	434	360	400	172	13 x 20
DSB26,7	140	125	690	-	0.98	450	240	232	517	360	450	170	14 x 20
DSB33,3	155	170	655	-	0.98	540	267	-	517	-	450	197	14 x 20
DSB40	185	215	780	-	0.98	540	297	-	517	-	450	227	14 x 20
DSB46,7	245	235	870	-	0.98	690	280	-	572	-	575	230	14 x 20
DSB53,3	270	310	1240	-	0.98	690	310	-	572	-	575	260	14 x 20
DSB60	280	310	1240	-	0.98	690	310	-	572	-	575	260	14 x 20
DSB66,7	295	310	1380	-	0.98	690	310	-	572	-	575	260	14 x 20
DSB80	330	290	1980	-	0.98	760	260	-	720	-	575	200	14 x 20
DSB93,3	345	420	2210	-	0.99	760	290	-	720	-	575	230	14 x 20

All dimensions in mm

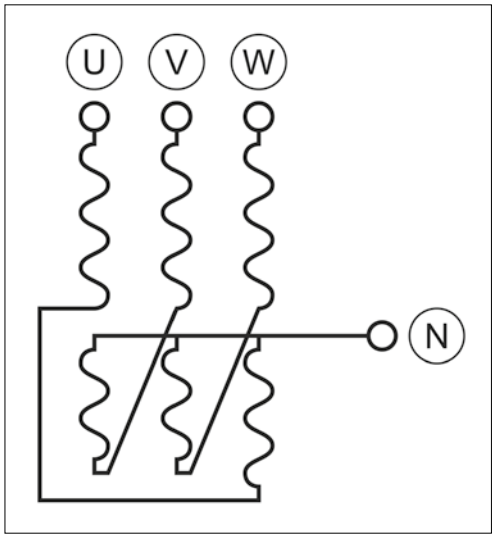

Designed and tested to
- IEC/EN 61558-2-6
- UL 5085-2
- CSA 22.2 No. 66

For use according to
- IEC/EN 60204-1

Typical applications
- Control voltage circuits
- Functional extra-low voltage

Basic equipment
- Separate windings
- Insulation class B
- Ambient temperature –25 to 40 °C
- Connection terminal (<63 A)
- Frequency 50/60 Hz
- Single-phase GW units with fuse on the DC side and LED

Further equipment
- Enclosure IP23 page 50
- Additional tapping page 53
- Temperature Control page 55

Design input voltage 50/60 Hz	Design output voltage (residual ripple)	Design input current	Type Order no.	Cu factor [1]
V AC	V DC	A		
230	24 (5 %)	3	**GW4-030-BA3** 4001704	0.36
		5	**GW4-050-BA3** 4001705	0.37
		8	**GW4-080-BA3** 4001706	0.82
		10	**GW4-100-BA3** 4001707	0.96

- CUR to EIS 130 or EIS 155 to OBJY2. or OBJY8.E160829 (electrical insulation component, insulation material system)

400 (± 5 %)	24 (3%)	5	**GD4-050-BD3** 4001699	0.65
		10	**GD4-100-BD3** 4001700	1.12
		15	**GD4-150-BD3** 4001701	1.30
		20	**GD4-200-BD3** 4001702	2.10
		30	**GD4-300-BD3** 4001703	3.00

[1] The method of calculation of the material price surcharge is explained in point 2.1 of our general terms and conditions

Phone: +43 2689 2744 - 0 | Fax: +43 2689 2744 - 9 | info@trafomodern.com | www.trafomodern.com

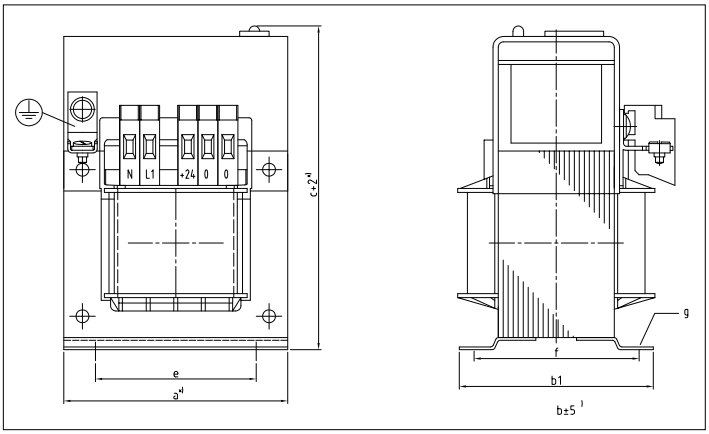

Fig. 1

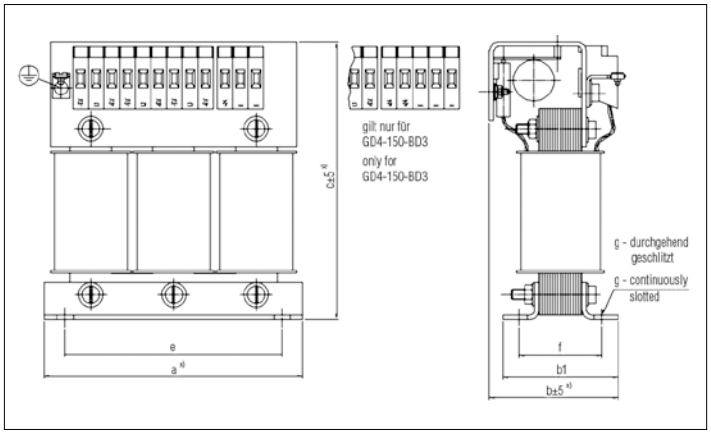

Fig. 2

	Type	Total weight	No-load losses	Total losses	Residual ripple	a	b	b1	c	e	f	g
		kg	W	W								
	Fig 1											
1)	**GW4-030-BA3**	2	7.6	26	< 5 %	85	85	74	119	64	60,5	4.8 x 8
1)	**GW4-050-BA3**	2.5	9	41	< 5 %	85	93	83	134	64	69	4.8 x 8
1)	**GW4-080-BA3**	3.65	12.8	46	< 5 %	106	95	87	150	80,5	69,5	5.8 x 12
2)	**GW4-100-BA3**	4.45	14.1	57	< 5 %	121	100	86	168	90	70	5.8 x 12
	Fig 2											
	GD4-050-BD3	2.4	5	27	< 3 %	125	68	61	135	100	45	5
	GD4-100-BD3	4.4	14.2	45	< 3 %	155	77	77	165	130	57	8
	GD4-150-BD3	5.8	13.9	63	< 3 %	155	92	92	165	130	72	8
	GD4-200-BD3	7.6	25.5	89	< 3 %	190	100	83	220	170	58	8
	GD4-300-BD3	11.2	38.2	101	< 3 %	190	110	103	235	170	78	8

1) solid baseplate
2) slotted baseplate

All dimensions in mm

Electromagnetic compatibility

Interference emissions	Class B, (EN 55 011, 22)
ESD	6 kV contact (level 3) 8 kV air (level 3), IEC/EN 61 000-4-2
RFI	10 V/m, modulated, IEC/EN 61 000-4-3
Burst	2 kV (level 3), IEC/EN 61 000-4-4
Surge	2 kV (inst. class 3), IEC/EN 61 000-4-5
Impulse voltage	4,9 kV, IEC/EN 60 947

Environmental data

Ambient temperature	-25 °C to +55 °C linear characteristic of the derating curve from 40 °C bis 55 °C from 100 % output to 93 % output
Storage and transport temperature	-25 °C to +85 °C
Degree of soiling	2, EN 50 178
Vibration	0,0075 mm, (10-57 Hz), 10 cycles, IEC 60 068-2-6
Shock	11 ms/15 g, IEC 60 068-2-27, (3 shocks)
Installation altitude	max. 2000 m above mean sea level, if higher, see derating curve

Type	U1	I1	Switch	Rated current	Switch	only short-circuit-protection
	V	A		A		
GW 4-030-BD3	230	0.45	PKZM0-0,63	0.45	FAZN S1	•
GW 4-050-BD3	230	0.8	PKZM0-1	0.8	FAZN S1	-
GW 4-080-BD3	230	1.2	PKZM0-1,6	1.2	FAZN S1	-
GW 4-100-BD3	230	1.4	PKZM0-1,5	1.4	FAZN S2	-
GD 4-050-BD3	3 x 400	0.24	PKZM0-0,25	0.24	FAZN S1	•
GD 4-100-BD3	3 x 400	0.46	PKZM0-0,63	0.46	FAZN S1	•
GD 4-150-BD3	3 x 400	0.65	PKZM0-1	0.65	FAZN S1	-
GD 4-200-BD3	3 x 400	0.9	PKZM0-1	0.9	FAZN S1	-
GD 4-300-BD3	3 x 400	1.8	PKZM0-2,5	1.8	FAZN S2	-

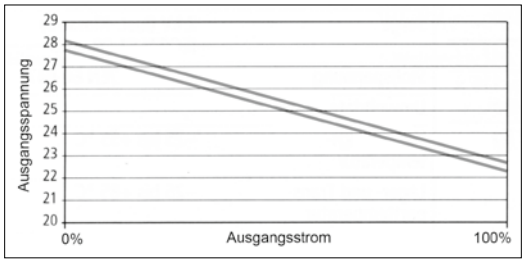

GW

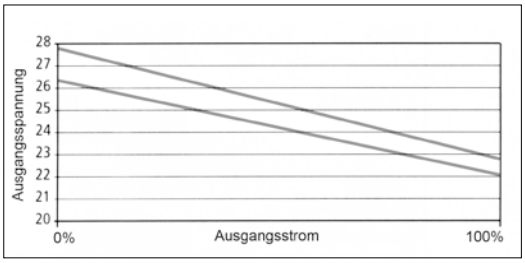

GD

In order to help the user to select the correct protective motor switch, protective motor switches made by EATON are listed in the above table as examples. Of course protective motor switches from other manufacturers are equally suitable and approved for performance of the task.

Designed and tested to
- IEC/EN 61558-2-20

Typical applications
- Inverter applications

Basic equipment
- Insulation class B
- Ambient temperature –25 to 40 °C
- Connection by terminals (<=25 A)
- Frequency 50/60 Hz

Further equipment
- Temperature monitoring page 55

Energy value L x I^2	Price [1] for current up to	Type [1]	Cu factor [2]
Ws	A		
0.19	16	**DEG0,03(*mH/*A)**	0.15
0.38		**DEG0,06(*mH/*A)**	0.25
0.64		**DEG0,1(*mH/*A)**	0.30
1		**DEG0,16(*mH/*A)**	0.40
1.3		**DEG0,2(*mH/*A)**	1.00
1.6		**DEG0,25(*mH/*A)**	1.00
2		**DEG0,315(*mH/*A)**	1.20
2.5	25	**DEG0,4(*mH/*A)**	1.30
3.2		**DEG0,5(*mH/*A)**	1.40
4		**DEG0,63(*mH/*A)**	2.00
5.1		**DEG0,8(*mH/*A)**	2.30
6.4		**DEG1,0(*mH/*A)**	3.00
8.3		**DEG1,3(*mH/*A)**	4.00
10.2		**DEG1,6(*mH/*A)**	4.50
12.7		**DEG2,0(*mH/*A)**	5.00
15.9		**DEG2,5(*mH/*A)**	5.50
19.1		**DEG3,0(*mH/*A)**	10.80
25.5		**DEG4,0(*mH/*A)**	11.00

[1] Additional charge for increased currents on request
[2] The method of calculation of the material price surcharge is explained in point 2.1 of our general terms and conditions
[3] Larger sizes on request

Formula for the calculation of the energy value:
W = L x I^2
L = inductance [H]
I = current [A]
For the exact design of the choke the following information must be added to the type designation:

DEG0,16(*mH/*A)
Replace the place holder before mH with the value of the inductance, and the placeholder before A with the current.

Sample order
- requested Inductance 25 mH
- rated current 5.9 A
- calculated energy value according to the formula 0.87 Ws type DEG0,16

The correct type designation reads
DEG0,16(25mH/5,9A)

The unique article number for your configuration will be defined by trafomodern during the quotation and ordering process.

Phone: +43 2689 2744 - 0 | Fax: +43 2689 2744 - 9 | info@trafomodern.com | www.trafomodern.com

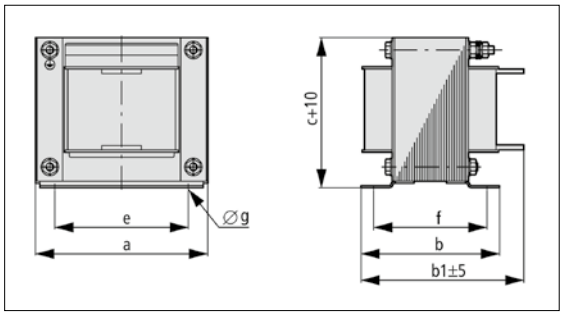

Fig. 1

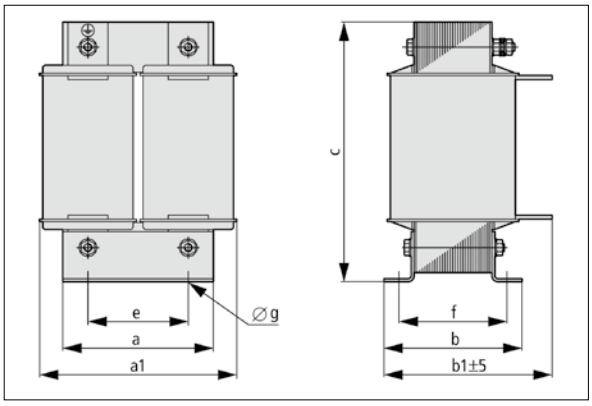

Fig. 2

Type	Total weight	Copper losses	a	a1	b	b1	c	b1	c	b1	c	b1	c
	kg	W				10 A	10 A	25 A	25 A	63 A	63 A	100 A	100 A
Fig 1													
DEG0,03	0,7	7	66	-	57	62	80	83	83	73	61	78	61
DEG0,06	1,5	7	84	-	63	68	90	89	78	78	75	83	75
DEG0,1	2	9	84	-	77	82	90	103	103	93	75	98	75
DEG0,16	2,3	14	84	-	85	91	112	112	103	100	75	105	75
DEG0,2	3	19	105	-	82	82	103	103	121	96	94	101	94
DEG0,25	3,8	16	105	-	90	90	111	111	121	104	94	109	94
DEG0,315	4,3	20	120	-	91	91	117	109	131	108	106	113	106
DEG0,4	5,2	21	120	-	103	103	117	121	131	120	106	125	106
DEG0,5	6,8	23	120	-	123	103	117	141	131	140	106	145	106
DEG0,63	7,7	29	150	-	109	109	142	122	155	127	132	132	132
DEG0,8	9,6	30	150	-	126	126	142	139	155	144	132	149	132
DEG1,0	13,4	31	150	-	152	152	142	165	155	170	132	175	132
DEG1,3	14,9	37	174	-	131	135	145	145	173	145	152	150	152
DEG1,6	17,4	46	192	-	146	146	181	151	194	159	170	164	170
DEG2,0	21,5	74	192	-	158	158	181	163	194	171	170	176	170
DEG2,5	21,5	78	192	-	158	158	181	163	194	171	170	176	170
Fig 2													
DEG3,0	26	63	150	197	197	138	259	155	160	165	182	222	202
DEG4,0	35	97	150	197	197	163	259	175	180	185	202	242	222

All dimensions in mm

Type	b1	c	b1	c	b1	c	e	f	ø g
	200 A	200 A	630 A	630 A	1000 A	1000 A			
Fig1									
DEG0,03	61	61	96	61	136	61	50	44	4.8 x 9
DEG0,06	75	75	102	75	142	75	64	50	4.8 x 9
DEG0,1	75	75	117	75	157	75	64	64	4.8 x 9
DEG0,16	75	75	125	75	165	75	64	72	4.8 x 9
DEG0,2	94	94	121	94	161	94	84	66	5.8 x 11
DEG0,25	94	94	129	94	169	94	84	74	5.8 x 11
DEG0,315	106	106	130	106	170	106	90	75	5.8 x 11
DEG0,4	106	106	142	106	182	106	90	87	5.8 x 11
DEG0,5	106	106	162	106	202	106	90	107	5.8 x 11
DEG0,63	132	132	149	132	189	132	122	89	7 x 13
DEG0,8	132	132	166	132	206	132	122	106	7 x 13
DEG1,0	132	132	192	132	232	132	122	132	7 x 13
DEG1,3	152	152	181	152	221	152	135	111	7 x 13
DEG1,6	170	170	186	170	226	170	150	116	10 x 18
DEG2,0	170	170	198	170	238	170	150	128	10 x 18
DEG2,5	170	170	198	170	238	170	150	128	10 x 18
Fig2									
DEG3,0	108	197	150	197	138	259	155	160	165
DEG4,0	133	197	150	197	163	259	175	180	185

All dimensions in mm

Designed and tested to
- IEC/EN 61558-2-20

Typical applications
- Inverter applications

Basic equipment
- Insulation class B
- Ambient temperature –25 to 40 °C
- Connection by terminals (<=25 A)
- Frequency 50/60 Hz

Further equipment
- Temperature monitoring page 55

ΔU = 9.2 V / phase rated current	Inductance L	Type Order no.	Cu factor [1]
A	mH		
6.5	4.51	**DEK0,03-9,2** 206954	0.15
13	2.25	**DEK0,06-9,2** 206955	0.25
22	1.33	**DEK0,1-9,2** 206956	0.30
35	0.84	**DEK0,16-9,2** 206957	0.40
44	0.67	**DEK0,2-9,2** 206958	1.00
54	0.54	**DEK0,25-9,2** 206959	1.00
69	0.42	**DEK0,315-9,2** 206960	1.20
87	0.34	**DEK0,4-9,2** 206961	1.30
109	0.27	**DEK0,5-9,2** 206962	1.40
137	0.21	**DEK0,63-9,2** 206963	2.00
174	0.17	**DEK0,8-9,2** 206964	2.30
217	0.13	**DEK1,0-9,2** 206965	3.00
285	0.103	**DEK1,3-9,2** 206966	4.00
350	0.084	**DEK1,6-9,2** 206967	4.50
440	0.067	**DEK2,0-9,2** 206968	5.00
550	0.053	**DEK2,5-9,2** 206969	5.50
650	0.045	**DEK3,0-9,2** 206970	10.80
870	0.034	**DEK4,0-9,2** 206971	11.00

[1] The method of calculation of the material price surcharge is explained in point 2.1 of our general terms and conditions

ΔU = 16 V / phase rated current	Inductance L	Type Order no.	Cu factor [1]
A	mH		
3.7	13.76	**DEK0,03-16** 206976	0.15
7.5	6.79	**DEK0,06-16** 206977	0.25
12.5	4.07	**DEK0,1-16** 206978	0.30
20	2.54	**DEK0,16-16** 206979	0.40
25	2.03	**DEK0,2-16** 206984	1.00
31	1.64	**DEK0,25-16** 206985	1.00
38	1.34	**DEK0,315-16** 206986	1.20
50	1.01	**DEK0,4-16** 206987	1.30
62	0.82	**DEK0,5-16** 206988	1.40
78	0.65	**DEK0,63-16** 206989	2.00
100	0.51	**DEK0,8-16** 206990	2.30
125	0.407	**DEK1,0-16** 206991	3.00
160	0.318	**DEK1,3-16** 206992	4.00
200	0.254	**DEK1,6-16** 206993	4.50
250	0.203	**DEK2,0-16** 206994	5.00
310	0.164	**DEK2,5-16** 206995	5.50
375	0.135	**DEK3,0-16** 206996	10.80
500	0.101	**DEK4,0-16** 206997	11.00

[1] The method of calculation of the material price surcharge is explained in point 2.1 of our general terms and conditions

Phone: +43 2689 2744 - 0 | Fax: +43 2689 2744 - 9 | info@trafomodern.com | www.trafomodern.com

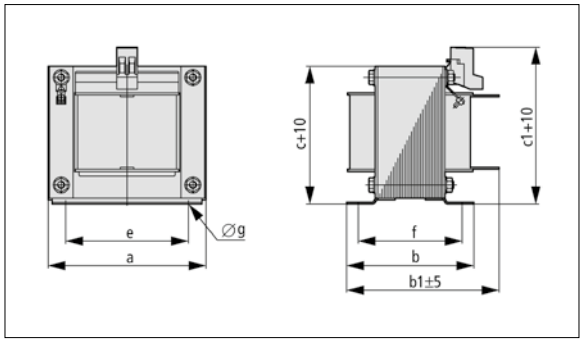

Fig. 1

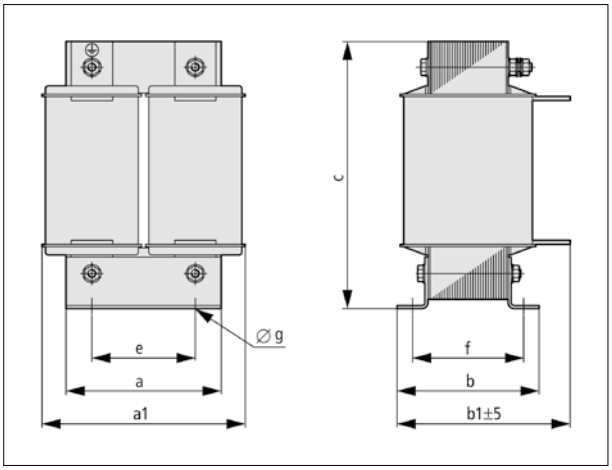

Fig. 2

Type	Total weight	Copper losses	a	a1	b	b1	c	c1	e	f	øg	Connection terminal	Lug
	kg	W											
Fig 1													
DEK0,03	0.7	7	66	-	55	71	61	80	50	44	4.8 x 8	4 mm2	-
DEK0,06	1.5	7	84	-	60	87	75	103	64	47	4.8 x 8	10 mm2	-
DEK0,1	2	9	84	-	74	101	75	103	64	61	4.8 x 8	10 mm2	-
DEK0,16	2.3	14	84	-	83	98	75	-	64	70	4.8 x 8	-	15 x 2/7ø
DEK0,2	3	19	105	-	80	94	94	-	85	63	5.8 x 12	-	15 x 2/7ø
DEK0,25	3.8	16	105	-	88	102	94	-	85	71	5.8 x 12	-	15 x 2/7ø
DEK0,315	4.3	20	120	-	86	108	106	-	90	68	5.8 x 12	-	20 x 3/9ø
DEK0,4	5.2	21	120	-	98	120	106	-	90	80	5.8 x 12	-	20 x 3/9ø
DEK0,5	6.8	23	120	-	118	145	106	-	90	100	5.8 x 12	-	25 x 5/11ø
DEK0,63	7.7	29	150	-	104	132	132	-	122	82	7 x 15	-	25 x 5/11ø
DEK0,8	9.6	30	150	-	121	149	132	-	122	99	7 x 15	-	25 x 5/11ø
DEK1,0	13.4	31	150	-	147	192	132	-	122	125	7 x 15	-	40 x 5/14ø
DEK1,3	14.9	37	174	-	140	181	152	-	135	115	7 x 15	-	40 x 5/14ø
DEK1,6	17.4	46	192	-	146	186	170	-	150	116	10 x 18	-	40 x 5/14ø
DEK2,0	21.5	74	192	-	158	198	170	-	150	128	10 x 18	-	40 x 10/14ø
DEK2,5	21.5	78	192	-	158	198	170	-	150	128	10 x 18	-	40 x 10/14ø
Fig 2													
DEK3,0	26	63	150	197	138	222	259	-	100	108	11	-	50 x 10/2 x 14ø
DEK4,0	35	97	150	197	163	242	259	-	100	133	11	-	50 x 10/2 x 14ø

All dimensions in mm

Designed and tested to
- IEC/EN 61558-2-20 / EN60076-6
- UL 5085-2
- CSA 22.2 No. 66 (UL/CSA up to 600V)

Typical applications
- Inverter applications

Basic equipment
- Insulation class B / F from 3,2 kVA
- Ambient temperature –25 to 40 °C
- Connection by terminals (<=45 A)
- Frequency 50/60 Hz

ΔU = 9.2 V / phase rated current	Inductance L	Type Order no.	Cu factor [1]
A	mH		
7	4.18	**DDK0,1-9,2** 215499	0.41
11	2.66	**DDK0,16-9,2** 215500	0.70
18	1.62	**DDK0,25-9,2** 215501	0.87
29	1.01	**DDK0,4-9,2** 215502	2.10
36	0.81	**DDK0,5-9,2** 215503	1.65
45	0.65	**DDK0,63-9,2** 215504	2.45
70	0.41	**DDK1,0-9,2** 215505	2.75
95	0.3	**DDK1,3-9,2** 215506	3.40
115	0.25	**DDK1,6-9,2** 215507	4.20
145	0.2	**DDK2,0-9,2** 215508	4.70
180	0.16	**DDK2,5-9,2** 215510	6.40
230	0.127	**DDK3,2-9,2** 215513	8.80
290	0.1	**DDK4,0-9,2** 215514	10.00
360	0.081	**DDK5,0-9,2** 215515	10.50
455	0.064	**DDK6,3-9,2** 215516	12.30
580	0.05	**DDK8,0-9,2** 215517	21.50
725	0.04	**DDK10-9,2** 215518	22.00
905	0.032	**DDK12,5-9,2** 215519	35.00
1160	0.025	**DDK16-9,2** 215520	48.00
1450	0.02	**DDK20-9,2** 215521	58.00
1810	0.016	**DDK25-9,2** 215522	61.00
2320	0.012	**DDK32-9,2** 215523	80.00
2900	0.01	**DDK40-9,2** 215524	63.00

[1] The method of calculation of the material price surcharge is explained in point 2.1 of our general terms and conditions

- CUR to UL file XPTQ2. or XPTQ8. E168819 (general purpose component, type testing)

Phone: +43 2689 2744 - 0 | Fax: +43 2689 2744 - 9 | info@trafomodern.com | www.trafomodern.com

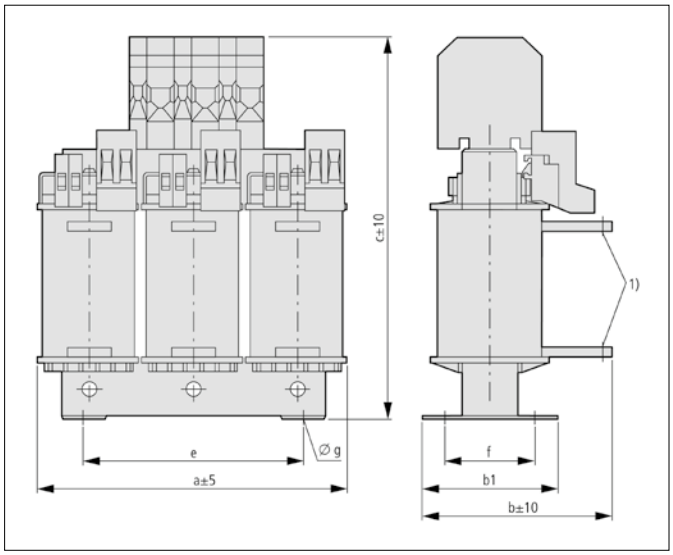

Type	Total weight	Copper losses	a	b	b1	c	e	f	ø g
	kg	W							
DDK0,1	1.5	25	115	66	66	118	100	50	5 x 10
DDK0,16	2.2	33	140	61	61	138	125	50	5 x 10
DDK0,25	2.9	41	140	71	71	138	125	50	5 x 10
DDK0,4	4.8	46	195	104	77	175	175	50	8 x 13
DDK0,5	5	56	195	119	92	172	175	75	8 x 13
DDK0,63	7.3	58	220	112	82	195	200	50	8 x 13
DDK1,0	10.2	75	220	130	102	160	200	75	8 x 13
DDK1,3	12.3	73	270	125	96	200	250	75	8 x 13
DDK1,6	14.9	89	270	155	120	202	250	100	8 x 13
DDK2,0	17.3	103	270	145	115	210	250	75	10 x 18
DDK2,5	20.6	106	270	155	125	210	250	100	10 x 18

1) Connection lugs

All dimensions in mm

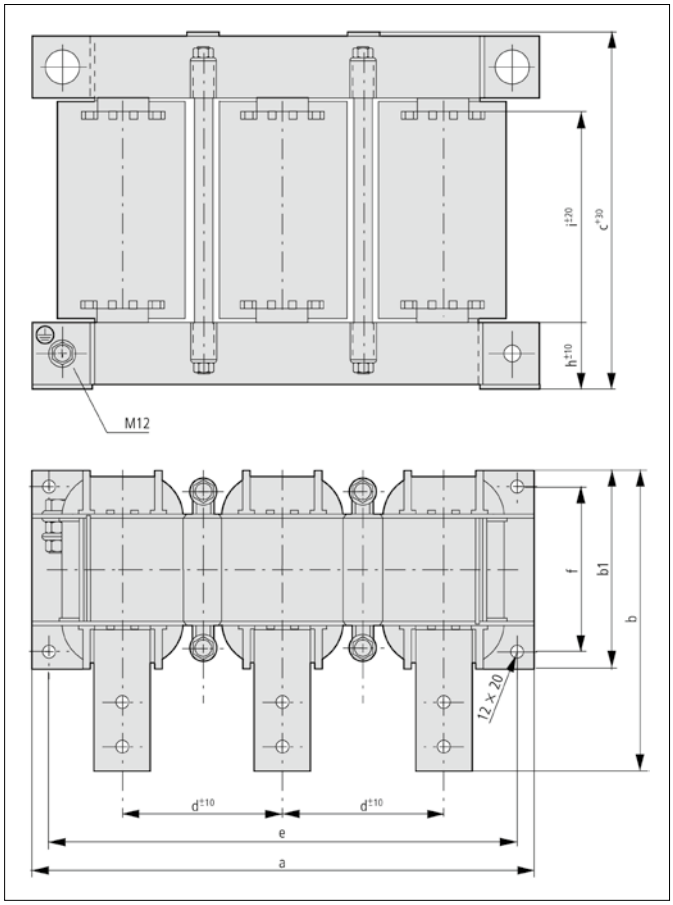

Type	Total weight	Copper losses	a	b	b1	c	d	e	f	h	i
	kg	W									
DDK3,2	30	148	384	195	105	258	115	350	75	50	160
DDK4,0	31	185	384	215	130	258	115	350	100	50	160
DDK5,0	40	144	384	240	155	258	115	350	125	50	160
DDK6,3	45	182	384	260	180	258	115	350	150	50	160
DDK8,0	55	229	454	270	150	313	145	425	100	60	230
DDK10	70	377	454	285	165	313	145	425	125	60	230
DDK12,5	80	382	454	300	180	313	145	425	150	60	230
DDK16	95	420	504	310	170	358	165	475	125	70	270
DDK20	125	450	504	340	200	358	165	475	175	70	270
DDK25	160	520	504	370	230	358	165	475	200	70	270
DDK32	161	650	554	355	215	408	185	525	175	80	300
DDK40	190	700	554	385	245	408	185	525	200	80	300

All dimensions in mm

Dimension b is a maximum dimension depending on the rated current and the terminal lugs used.
Dimension c depends on the choke data (number of windings and set air core).
The precise height and depth of the choke can only be determined on the basis of the choke data.

IP23
PROTECTIVE STEEL SHEET ENCLOSURE

- Protection type IP23
- Paint finish RAL 7032
- Other protection types on request
- Other colours on request

Enclosure	for type STZ	for type UTI	for type ET, ETSP	for type DTZ	for type DT, DTSP	for type DTF, DTFSP	for type D4TB	for type D4TF	for type DSB	Order no.
IP23/01		0.1	0.03-0.2							**200618**
IP23/02		0.2-0.5	0.25-0.63							**200623**
IP23/03		0.63-1.0	0.8-2.0							**200624**
IP23/04										**226100**
IP23/05	5.3-8.3		6.3-8.0							**219648**
IP23/06	13.3		10-25							**200649**
IP23/30				0.1-0.16	0.1-0.25					**200706**
IP23/31				0.25-0.63	0.4-0.5					**200753**
IP23/32A			2.5-5.0	1.0-2.0	0.63-2.5				0.67-1.3	**200763**
IP23/33				2.5-6.3	3.2-6.3		4.0-5.0		3.3-6.7	**200754**
IP23/34				8.0-25	8.0-10	12.5-20	6.3-16		10-20	**200755**
IP23/35						25-40	20	25-40	26.7-40	**200756**
IP23/36						50-125		50-100	46.7-93.3	**200757**
IP23/37						163-250				**4006033**
IP23/38						315-500				**76612**

Sample order:
IP23/01 enclosure
for ET0,03

Transformer type		Nominal output voltage				
STN	STZ/STI	12V	24V	42V	100V	100-525V
0.03	-	IP23/01	IP23/01	IP23/01	IP23/01	IP23/01
0.06	0.06	IP23/01	IP23/01	IP23/01	IP23/01	IP23/01
0.1	0.1	IP23/01	IP23/01	IP23/01	IP23/01	IP23/01
0.16	0.16	IP23/01	IP23/01	IP23/01	IP23/01	IP23/01
0.2	0.2	IP23/02	IP23/02	IP23/02	IP23/02	IP23/02
0.25	0.25	IP23/02	IP23/02	IP23/02	IP23/02	IP23/02
0.315	0.315	IP23/02	IP23/02	IP23/02	IP23/02	IP23/02
0.4	0.4	IP23/02	IP23/02	IP23/02	IP23/02	IP23/02
0.5	0.5	-	IP23/02	IP23/02	IP23/02	IP23/02
0.63	0.63	-	IP23/03	IP23/03	IP23/03	IP23/03
0.8	0.8	-	IP23/03	IP23/03	IP23/03	IP23/03
1	1	-	IP23/04	IP23/04	IP23/03	IP23/03
1.3	1.3	-	IP23/04	IP23/04	IP23/04	IP23/04
1.6	1.6	-	IP23/32A	IP23/32A	IP23/04	IP23/04
2	2	-	IP23/32A	IP23/32A	IP23/04	IP23/04
2.5	2.5	-	IP23/32A	IP23/32A	IP23/32A	IP23/32A
3	3	-	IP23/05	IP23/05	IP23/05	IP23/05
4	4	-	IP23/05	IP23/05	IP23/05	IP23/05

Sample order:
IP23/01 enclosure for STN0,03
Output voltage 24

Phone: +43 2689 2744 - 0 / Fax: +43 2689 2744 - 9 / info@trafomodern.com / www.trafomodern.com

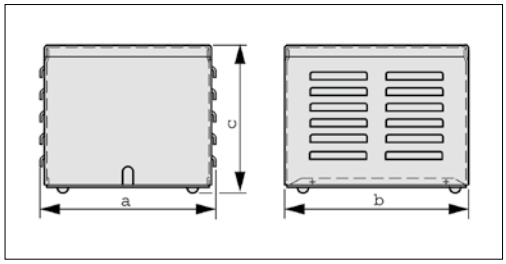

Fig. 1

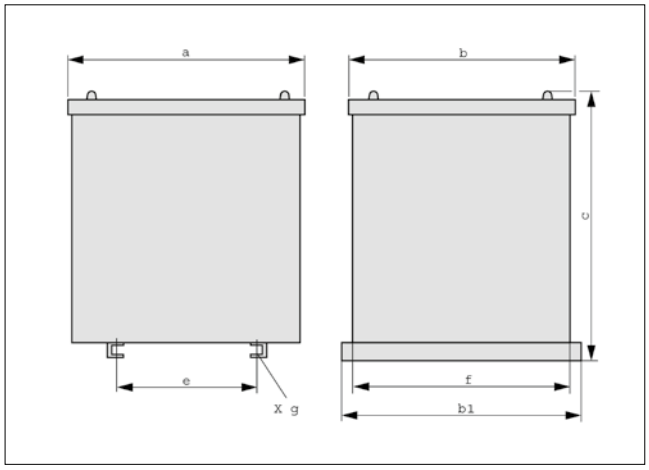

Fig. 2

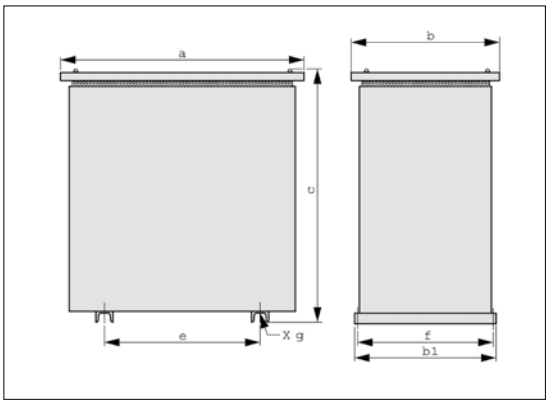

Fig. 3

Type	Weight	a	b	b1	c	e	f	øg
	kg							
Fig 1								
IP23/01	0.7	118	145	-	122	-	-	-
IP23/02	1.5	192	184	-	160	-	-	-
IP23/03	1.8	192	184	-	203	-	-	-
IP23/04	2.7	231	254	-	203	-	-	-
IP23/30	1.5	192	184	-	160	-	-	-
IP23/31	2.7	231	254	-	203	-	-	-
IP23/32A	6.4	263	360	-	315	-	-	-
Fig 2								
IP23/05	17.8	390	390	430	570	230	390	10
IP23/06	26	500	480	540	690	270	500	13
IP23/33	14.9	410	340	360	520	212	330	10
IP23/34	23	560	440	460	620	350	430	12
Fig 3								
IP23/35	33	730	480	450	857	450	425	14
IP23/36	50	930	580	550	1057	575	525	14
IP23/37	168	1510	970	920	1200	705	870	26
IP23/38	185	1510	970	920	1430	705	870	26

All dimensions in mm

Base price of thetransformer forcurrents up to	Type	Type	Type
A			
	larger design for currents up to 25 A	larger design for currents up to 63 A	larger design for currents up to 100A
16	**+STR16/25**	**+STR16/63**	**+STR16/100**
25	**-**	**+STR25/63**	**+STR25/100**
63	**-**	**-**	**+STR63/100**
	larger design for currents up to 200 A	larger design for currents up to 320 A	larger design for currents up to 630 A
16	**+STR16/200**	**+STR16/320**	**+STR16/630**
25	**+STR25/200**	**+STR25/320**	**+STR25/630**
63	**+STR63/200**	**+STR63/320**	**+STR63/630**
100	**+STR100/200**	**+STR100/320**	**+STR100/630**
200	**-**	**+STR200/320**	**+STR200/630**
320	**-**	**-**	**+STR320/630**
400	**-**	**-**	**+STR400/630**

Additional charge for increased current
larger dimensioned terminals for transformers
STN, STI, STZ, ET, ETSP, DTZ, DT, DTSP
When selecting a transformer, the input voltage,the output voltage and the requested output must be considered.
The **basic price** of the selected transformer is always related to a specific current (refer to order indications, column ¨Price for currents up to¨).
If due to the selected output and voltage the actual current exceeds the output of the basic type an additional charge will be added.

Sample order
- Selected transformer STZ4,0(400/230), max. current: 25 A; 4000 VA: 230 V (:√3*) = 17,4 A < 25 A
  no additional charge as the current is within the permissible range
- Selected transformer STZ4,0(400/110), max. current: 25 A;
  4000 VA: 110 V (:√3*) = 36,4 A > 25 A larger design necessary
- Select from the table: larger design up to63 A,: Order number extension + STR25/63, additional charge 12.60 Euro

(*) for three-phase

Phone: +43 2689 2744 - 0 / Fax: +43 2689 2744 - 9 / info@trafomodern.com / www.trafomodern.com

Suitable for	Output	Type
	kVA	
Static shield winding for single-phase transformers		
	0.03–2.0	**+W1,8**
	2.5–4.0	**+W4,0**
	5.0–13.0	**+W6,0**
	16.0–25.0	**+W20**
for three-phase transformers		
	0.1–6.3	**+W6,0**
	8.0–20.0	**+W20**
	25.0–100.0	**+W163**

Larger types on request
Standard design: Shield connected to ground

Suitable for	Output	Type
	kVA	
Tropicalisation additional varnishing after impregnation with tropicalisation varnish		
	0.03–0.2	**+TA0,2**
	0.25–1.3	**+TA1,4**
	1.6–4.0	**+TA4,0**

Larger types on request

Suitable for	Current range	Type	Type
	A		
Additional tapping for single-phase transformers			
	‹ 16	**+ZA16P(*)**	**+ZA16S(*)**
	16–25	**+ZA25P(*)**	**+ZA25S(*)**
	25–63	**+ZA63P(*)**	**+ZA63S(*)**
	63–100	**+ZA100P(*)**	**+ZA100S(*)**
	100–200	**+ZA200P(*)**	**+ZA200S(*)**
	200–320	**+ZA320P(*)**	**+ZA320S(*)**
	400–630	**+ZA630P(*)**	**+ZA630S(*)**
for three-phase transformers			
	‹ 16	**+DZA16P(*)**	**+DZA16S(*)**
	16-25	**+DZA25P(*)**	**+DZA25S(*)**
	25-63	**+DZA63P(*)**	**+DZA63S(*)**
	63-100	**+DZA100P(*)**	**+DZA100S(*)**
	100-200	**+DZA200P(*)**	**+DZA200S(*)**
	200-320	**+DZA320P(*)**	**+DZA320S(*)**
	400-630	**+DZA630P(*)**	**+DZA630S(*)**

Selection of the correct tapping for single-phase transformers

Sample order:
- selected transformer STZ0,25(400/24)
- requested voltage of the additional tapping 22 V
- the current for the selection of the tapping is calculated as follows:

I = S/U
I = current
S = apparent output
U = voltage of the tapping
I = 250/22 = 11,4 A = +ZA16

For the tapping on the secondary side, the correct order number extension reads:
+ZA16S(22)

An additional primary tapping is determined in the same manner.

Selection of the correct tapping for three-phase transformers

Sample order:
- selected transformer DTZ0,25(400/24)
- requested voltage of the additional tapping 22 V
- the current for the selection of the tapping is calculated as follows:

I = S/U
I = current
S = apparent output
U = voltage of the tapping
I = 250/(√3 x 22) = 6,6 A = +DZA16

For the secondary tapping, the correct order number extension reads:
+DZA16S(22)

An additional primary tapping is determined in the same manner.

If the rated input or output voltages deviate by more than ± 10 %:
- request size of transformer
- in addition to the tapping, indicate the output split

Primary current [1] I_n	Suitable for	Order number extension if ordered with the basic device	Type* Order number if ordered separately
A			
for single-phase transformers			
1	STN STI	**+EEB1** 226101	**EEB1** 226102
2	STZ ET	**+EEB2** 226103	**EEB2** 226104
3		**+EEB3** 226105	**EEB3** 226106
5		**+EEB5** 226107	**EEB5** 226108
7		**+EEB7** 226109	**EEB7** 226110
10		**+EEB10** 226111	**EEB10** 226112
15		**+EEB15** 226113	**EEB15** 226114
18		**+EEB18** 226115	**EEB18** 226116
20		**+EEB20** 226117	**EEB20** 226118
30		**+EEB30** 226119	**EEB30** 226120
for three-phase transformers			
1	DTI DTZ	**+DEB1** 226121	**DEB1** 226122
2	DT	**+DEB2** 226123	**DEB2** 226124
3		**+DEB3** 226125	**DEB3** 226126
5		**+DEB5** 226127	**DEB5** 226128
7		**+DEB7** 226129	**DEB7** 226130
10		**+DEB10** 226131	**DEB10** 226132
15		**+DEB15** 226133	**DEB15** 226134
18		**+DEB18** 226135	**DEB18** 226136
20		**+DEB20** **226137**	**DEB20** 226138
30		**+DEB30** 226139	**DEB30** 226140

[1] Primary current: rating plate of the transformer by calculation

single-phase: $I_n = S_n / (U_{Nprim} \times \eta)$

three-phase: $I_n = S_n / (\sqrt{3}\, U_{Nprim} \times \eta)$

S_n = rated output of the transformer
U_{Nprim} = primary rated voltage of the transformer
η = efficiency (refer to Technical Data table)

* For separate orders always indicate the relevant transformer type and its technical specifications

Phone: +43 2689 2744 - 0 / Fax: +43 2689 2744 - 9 / info@trafomodern.com / www.trafomodern.com

Suitable for	Current range	Type
	A	
Spring-type terminals		
for primary currents up to 20 A or 4mm²		
STZ, STN, ET		**+C4**
for single-phase transformers		
	‹ 16	**+ZW16S(*V*VA)**
	16–25	**+ZW25S(*V*VA)**
	25–63	**+ZW63S(*V*VA)**
	63–100	**+ZW100S(*V*VA)**
	100–200	**+ZW200S(*V*VA)**
	200–320	**+ZW320S(*V*VA)**
	320–400	**+ZW400S(*V*VA)**
	400–630	**+ZW630S(*V*VA)**
for three-phase transformers		
	‹ 16	**+DZW16S(*V*VA)**
	16–25	**+DZW25S(*V*VA)**
	25–63	**+DZW63S(*V*VA)**
	63–100	**+DZW100S(*V*VA)**
	100–200	**+DZW200S(*V*VA)**
	200–320	**+DZW320S(*V*VA)**
	320–400	**+DZW400S(*V*VA)**
	400–630	**+DZW630S(*V*VA)**

Spring-type terminals can be fitted to both the primary and secondary side.

Sample order for spring-type terminals:
STZ0,5(400/230)
Determination of the current:
$I_{prim} = S_N /(U_{prim} \times \eta)$
$I_{sec} = SN /U_{sec}$
S_N = rated output of the transformer
U_{prim} = primary voltage
U_{sec} = secondary voltage
η = efficiency (refer to Technical Data table)
I_{prim} = 500 VA/(400 V x 0,93) = 1,34 A < 20 A
I_{sec} = 500 VA/230 V = 2,17 A < 20 A

Specification of the number of terminals:
2 on the secondary side
4 on the primary side
Order types:
1 unit STZ0,5(400/230)
6 units +C4

Sample order:
Transformer STZ...(400 V/200 V) mit 1000 VA and
with 1 secondary side additional winding for 100 V and 200 VA. The resulting required output is 1200 VA. Type to be selected:
STZ1,3(400/200)

To determine the price of the additional winding, the current is calculated as follows:
I = S/U
I = current
S = apparent output of the additional winding
U = voltage of the additional winding
I = 200 VA/100 V = 2 A = +ZW16

For the additional winding on the secondary side, the correct
order number extension reads:
+ZW16S(100 V/200 VA)

A maximum of 5 additional windings on the primary and/or secondary side can be ordered.
Primary additional windings: on request

Special accessories	
• Temperature monitoring PTC resistor bi-metal thermostat (Clixon NC 250 V max. 0.5 A) PT100 sensor	
• Transformer fuse terminal	230 V max. 6,3 A 400 V max. 10,0 A
• Top hat rail adapter (for retrofitting)	

GENERAL TERMS AND CONDITIONS OF BUSINESS, DELIVERY AND PAYMENT

of Trafomodern Transformatorengesellschaft m.b.H., Industriestrase II/11, A-7053 Hornstein, hereinafter referred to as TM

1. Conclusion of contract and application

1.1. The present General Terms and Conditions of Business, Delivery and Payment shall constitute an integral part of every quotation and every contract unless explicitly agreed otherwise in writing in individual cases. Any terms and conditions of the Purchaser which provide otherwise shall be invalid.

1.2. The status of the present General Terms and Conditions of Business, Delivery and Payment corresponds to the date shown below. It is however always the version of the General Terms and Conditions of Business, Delivery and Payment in existence at the time of confirmation of the order and posted on the homepage of TM's website (www.trafomodern.com) which are valid here.

1.3. Any agreements which are concluded verbally shall be subject to the written confirmation of TM to attain validity.

1.4. Quotations issued by TM shall be without obligation unless agreed otherwise. A contract shall not come into being until after confirmation of the order by TM.

1.5. TM explicitly reserves the right to make changes to the technical or visual design or to technical or visual details without informing the Purchaser in advance provided that the technically relevant characteristics of TM's products are not modified by such changes.

2. Prices

2.1. The prices charged by TM always consist of a product price (basic price) and an additional material surcharge (copper surcharge). Quotations, price lists and all written documents of TM always indicate the product price. The additional material surcharge depends on the weight of copper in the product and is calculated as follows: If the copper price is lower than 1.53 euros/kg, no material surcharge will be applied. If the copper ingot price exceeds the level of 1.53 euros/kg, TM will apply a material surcharge corresponding to the mean price (MK price) for the previous month. The copper weight (Cu factor) is indicated by TM in its catalogues, quotations, price lists and on its website. The copper price (MK price) applicable in each case is indicated by TM on its website. The reference date for determination of the material surcharge shall be the date on which the order was placed.

Material surcharge = (mean price for the previous month in euros/kg – 1.53 euros/kg) * Cu factor

2.2. Unless agreed otherwise, the prices agreed shall be fixed prices, while the material surcharge will be subject to fluctuation every month.

2.3. Unless stated otherwise, prices are quoted ex works or ex warehouse (EXW, Incoterms 2000) of TM in Hornstein including packaging and loading but excluding value-added tax. Where fees, taxes or other dues are charged in conjunction with delivery, they shall be borne by the Purchaser. Where delivery including shipment has been agreed, a separate charge shall be made here, in addition to any transport insurance required by the Purchaser, albeit not including unloading and transfer. Packaging shall only be taken back where explicitly agreed.

2.4. Where the order diverges from the overall quotation, TM reserves the right to adjust its prices accordingly.

2.5. Prices shall be based on the costs applicable at the time of the first quotation. Should there be a change in charges or other third-party costs included in the agreed price after conclusion of the contract or should such costs subsequently come about, TM shall be entitled to adjust its prices to a corresponding degree. Such charges and third-party costs might for example involve the updating of a collective agreement or other costs incurred for provision of the service such as charges for material, energy, shipment, third-party work, financing, etc..

3. Terms of payment

3.1. In the absence of any written agreement to the contrary, invoices issued by TM shall be due for payment 30 days net after the date of invoice.

3.2. Payment shall be effected in such a manner that TM is able to dispose of the sum on the due date. The costs of the payment transaction shall be for the Purchaser's account. Set-off shall then be subject to the existence of a valid declaration of set-off, i.e. where the claim and counterclaim are valid, of the same nature and both due at the time of set-off. Moreover, no special prohibition on set-off shall exist. The Purchaser may claim a right of retention only where the service forming the subject of the quotation does not comply with the contract in terms of quantity or quality or where improvement is requested following the supply of defective goods.

3.3. Any discounts must be agreed separately with TM in writing, with explicit reference. They are indicated in the invoice issued by TM. Agreements other than those indicated in TM's invoice (e.g. verbal agreements) shall be invalid. The discount period shall be specified in calendar days (not in working days). It should be noted here that the discount period shall commence on the date of TM's invoice and not the date of receipt of the invoice or the goods by the customer. To take advantage of the discount, payment may be effected only by means of bank transfer so that TM is able to avail itself of the sum on the date of expiry of the discount period. Where means of payment other than bank transfer are used (e.g. cash, cheque), the entitlement to the discount shall be automatically forfeited.

3.4. Where the Purchaser is in default with an agreed payment or other performance, TM may, without prejudice to other rights,

3.4.1. defer fulfilment of its own obligations until such payment or other performance has been effected,

3.4.2. bring forward the due date of all outstanding claims from this or other transactions. The Purchaser shall then be charged interest on default at the statutory rate from the relevant due date (Section 352 Austrian Business Enterprise Code (UGB)). In addition to the statutory interest TM shall moreover be entitled to claim compensation for other prejudice it has sustained through the actions of the debtor, in particular costs incurred for appropriate extrajudicial execution and collection measures insofar as same are proportionate to the claim pursued.

3.5. Where the Purchaser is in default of payment or should he fail to honour a bill of exchange on its due date, TM shall be entitled to take back the goods and, where applicable, to enter the Purchaser's premises and seize the goods. TM may furthermore prohibit the resale and removal of the supplied goods. The taking-back of same shall not constitute withdrawal from the contract. In such case the Purchaser shall not be entitled to take over the goods again until the purchase price has been paid in full plus interest on default and any other costs incurred by TM in this regard.

4. Fulfilment of delivery, delivery periods and dates

4.1. The delivery period shall commence with the date of the order confirmation issued by TM and shall apply only where all details of the order are clarified in good time and all obligations of the Purchaser (e.g. provision of material, etc.) are fulfilled in a timely manner.

4.2. The obligation of delivery shall be subject to the reservation of correct and timely self-supply unless such incorrect or delayed delivery has been caused by TM.

4.3. Instances of force majeure shall entitle TM to defer delivery for the duration of the impediment and a lead-in period of reasonable length. This shall likewise apply where such events coincide with an existing delay. Force majeure shall include measures involving currency or trade, political and other governmental acts, strike, lockouts, interruption of service not caused by TM (e.g. fire, machine failure, shortage of raw material or energy), obstruction of traffic routes, delays in import / customs clearance, as well as all circumstances not caused by TM which significantly impede or render impossible delivery and performance. It is immaterial here whether such a situation is experienced by TM or a subsupplier. Where in consequence of the above-mentioned events performance of the contract can no longer be reasonably expected of TM, TM may annul the contract without the granting of an additional period of grace.

4.4. TM shall be entitled to effect and charge for partial or advance delivery. Where delivery on call is agreed, the goods shall be deemed to have been called at the latest one (1) year after ordering. Advance deliveries shall be accepted by the Purchaser within reasonable limits.

4.5. Compliance with delivery dates / periods shall be determined by the date of dispatch ex works or warehouse. They shall be deemed to have been observed with issue of a notice of readiness for shipment where it is not possible to dispatch the goods in a timely manner through no fault on the part of TM.

4.6. Where the Purchaser is in default of acceptance and the goods accidentally perish, TM shall be released of its obligation of performance but shall retain the right to counter-performance. Moreover, the duty of care owed to the goods by TM shall be reduced from occurrence of said default so that TM shall henceforth be merely liable for gross negligence. In consequence of the creditor's delay in accepting performance TM shall hold a right of deposit at the Purchaser's expense (10 euros per calendar day or part thereof) with debt-discharging effect. In the event of default of acceptance TM may refuse to further uphold its willingness to perform and withdraw from the contract after having granted an additional period of grace of reasonable length and utilise the goods elsewhere; in such case a contractual penalty amounting to 0.5% of the invoiced amount per day shall moreover be deemed to have been agreed from provision until expiry of the additional period of grace. The contractual penalty shall not exceed 20% of the invoiced amount.

5. Partial delivery, continuous delivery and transfer of risk

5.1. TM always effects delivery ex works (Incoterms 2000: EXW). Where otherwise agreed, the route and means of transport shall be determined by TM, in addition to the forwarding agent and carrier to be used in each case.

5.2. Where shipment via the intended route, to the intended destination or within the intended period become impossible through no fault on the part of TM, TM shall be entitled to effect delivery by another route or to another destination, whereby the additional costs incurred thereby shall be borne by the Purchaser. The Purchaser shall be given the opportunity to comment in this regard beforehand.

5.3. The benefit and risk shall pass to the Purchaser on provision of the goods at the works or on departure of the consignment from the works or warehouse, irrespective of the invoicing term agreed for delivery (e.g. carriage paid, DIF, CPT, DDP, etc.). The rules laid down in Incoterms 2000 shall not be valid here, even where agreed in writing. This shall also apply where delivery takes place in the framework of assembly or when shipment is carried out or organised and managed by TM.

6. Taking-back of goods

6.1. The Purchaser shall not be entitled to demand that TM take back goods which have been acquired by the Purchaser. This shall in particular be excluded in the case of customer-specific goods.

Phone: +43 2689 2744 - 0 / Fax: +43 2689 2744 - 9 / info@trafomodern.com / www.trafomodern.com

6.2. Where TM agrees by way of exception to take back goods on the basis of goodwill (e.g. standard products which TM can utilise elsewhere), TM shall refund the Purchaser 80% of the price of the goods and retain 20% of this price (however, a minimum of 20.00 euros) to cover the administrative costs incurred thereby.

7. Reservation of title

TM shall reserve the title to all goods supplied by TM pending payment in full of the invoiced amounts plus interests and costs. The Purchaser shall hereby assign to TM his claim from any resale of goods subject to reservation of title in order to safeguard its claim to the purchase price, including where same has undergone processing, and undertakes to make a note to this effect in his accounts and invoices. On request the Purchaser shall inform TM of the assigned claim including its debtor, shall make available all information and documents required for collection of the receivables and inform the third-party debtor of such assignment. In the event of seizure or other availment the Purchaser shall be obliged to make reference to the title held by TM and to notify the latter immediately.

8. Notification of defects and warranty

8.1. No warranty claims can be derived from information contained in catalogues, brochures, advertising materials and written or verbal statements which are not included in the contract. Only the written text of the quotation and confirmation of order shall be valid in this instance.

8.2. TM shall be obliged according to the following provisions to rectify any defect impairing functionality in existence at the time of handover which can be attributed to a defect in design, material or workmanship.

8.2.1. Defects observed in goods must be reported in writing without delay, not later than 14 days following delivery. Failure to immediately provide written notification of the defects shall render warranty claims null and void. Defects which are not discovered within this period despite even the most meticulous inspection may be reported in writing on discovery, whereby any processing of same shall cease immediately. The notification of defects shall include the following information so that TM can ensure correct handling of the claim:

- Order number for the delivery
- Description of the defect and the date/time of its discovery
- Suggestion by the Purchaser of how to proceed with the claim
- Clear and informative photographs of the defect or damage
- Any additional facts relevant to the defect/claim.

8.2.2. Following a justified notification of defect within the deadline TM may at its preference either effect improvement of the goods forming the subject of complaint or replace same with goods free from defect. Should improvement prove impossible or where TM is in default with improvement/replacement and fails to effect same even with the granting of an additional period of grace, the Purchaser shall be entitled to demand a price reduction or – where a major defect is involved – redhibition (cancellation of the contract). The Purchaser shall however hold a right of redhibition only in the case of a major defect and where TM fails to improve or replace the goods within a reasonable period of time.

8.2.3. TM shall provide an identical warranty for improvement and substitute delivery as for the original delivery or performance.

8.3. Should the defect manifest itself within three months following handover of the goods, TM shall furnish proof that the goods were free from defect on handover. At the end of this three-month period the Purchaser must furnish proof that the defect was in existence at the time of handover.

8.4. The warranty period shall be 12 months unless special warranty periods are agreed for individual delivery items. This shall also apply to items forming the subject of delivery or performance which are permanently affixed to a building or landed property or which have otherwise undergone further processing. The warranty period shall commence at the time of the transfer of risk according to item 5.3 of the present General Terms and Conditions of Business, Delivery and Payment. Claims according to Section 933b Austrian Civil Code (ABGB) shall in all cases shall expire by limitation at the end of the period specified in this clause.

8.5. All additional service charges associated with rectification of the defect (e.g. for installation and removal, shipment, disposal, travel expenses/time) shall borne by the Purchaser. Auxiliary personnel, lifting gear, scaffolding and incidentals, etc. required for the performance of warranty work at the Purchaser's premises shall be provided free of charge. Any replaced parts which are not anyway subject to the reservation of title shall become the property of TM. Where goods are manufactured by TM according to design data, drawings, models or other specifications of the Purchaser, the liability of TM shall include operational execution only.

8.6. The warranty shall exclude such defects which cannot be attributed to TM but result from the configuration and installation brought about by the Purchaser, inadequate facilities, failure to comply with installation requirements and conditions of use, overloading of parts so exceeding the capacity specified by TM, negligent or improper treatment and the utilisation of unsuitable operating materials; this shall likewise apply to defects which can be attributed to material furnished by the Purchaser. Nor shall TM be liable for any damage resulting from actions of third parties, atmospheric discharge, overvoltages and chemical effects. The warranty shall not cover the replacement of parts subject to natural wear and tear. TM accepts no liability with the sale of used goods.

8.7. The warranty shall immediately become null and void where modification or repair is made to the supplied objects by the Purchaser himself or a third party not explicitly authorised by TM without the written consent of TM.

8.8. The present provisions shall also apply mutatis mutandis whenever a guarantee is given for defects on other legal grounds.

9. Compensation for damage, liability and product liability

9.1. TM shall be liable for damage beyond the scope of the Austrian Product Liability Act only where TM is proven to have acted with intent or gross negligence, within the framework of the statutory provisions. Liability for slight negligence, compensation for consequential damage and financial loss, failure to achieve savings, loss of interest and prejudice ensuing from third-party claims against the Purchaser shall be excluded. Unless shorter periods are specified by the statutory provisions, all claims of the Purchaser shall be enforced by legal action within three (3) years from the transfer of risk or shall be forfeited.

9.2. This item shall be governed by the Austrian Product Liability Act.

10. Intellectual property rights and copyright

10.1. Where goods are manufactured by TM based on design data, drawings, models or other specifications of the Purchaser, the Purchaser shall hold harmless and indemnify TM for possible violations of property rights.

10.2. Working documents such as plans, drawings and other technical documents as well as samples, catalogues, brochures, diagrams, etc. shall in all cases remain the intellectual property of TM and as such are subject to the relevant statutory provisions in respect of reproduction, imitation, competition, etc.

10.3. All quotation and project documentation, drawings and drafts, as well as samples, models, printing blocks and other auxiliary materials provided by TM shall remain the intellectual property of TM and may not be used without its written consent; TM may ask for same to be handed back at any time, whereby they must be returned to TM at once if the order is placed elsewhere. The order and all information, documentation etc. relating to the order constitute trade secrets of TM and must be treated as confidential. On request, all such documents, data and copies of thereof must be either handed back to TM or destroyed and must also be erased from any hardware.

11. Data processing and data protection

11.1. TM uses a modern data processing system in which corporate data is already registered and stored at an early stage, i.e. first contact with (potential) business partners. "Corporate data" shall in this context for example mean contact persons of any nature, the name of the company, addresses and contact data as well as executives and company organs (managing director, managers, etc.) as well as other relevant company data (VAT ID number, ARA licence number, etc.). Business partners communicating with TM explicitly consent to the storage of this data and its use by TM for in-house analysis and marketing without having granted prior approval.

11.2. TM shall ensure the confidentiality of such data irrespective of the circumstances in which it came to the notice of TM. TM guarantees that misuse of this data is excluded where this is within TM's control.

12. General

12.1. Should individual provisions of the present contract or these provisions be invalid, this shall not affect the validity of the other provisions. The invalid provision shall be replaced by a valid provision which comes as close as possible to the purpose intended thereby.

12.2. All agreements, subsequent amendments, additional or subsidiary agreements etc. must be made in writing to attain validity, thus also including the original or secure signature. A telefax shall also be deemed to satisfy this requirement for the written form. E-mails shall only be deemed to do so where there exists not merely a single e-mail but a sequence of e-mail correspondence documenting the conclusion of agreements, amendments, additional or subsidiary agreements etc.

13. Place of performance, legal venue and applicable law

13.1. Unless otherwise agreed, the place of performance shall be the plant of TM in Hornstein. The court having jurisdiction as regards the subject matter at TM's principal place of business (currently A-7000 Eisenstadt) shall hold sole jurisdiction for the settlement of all disputes arising in conjunction with the contract.

13.2. Austrian law shall apply subject to the exclusion of the rules of referral. The application of the UNCITRAL convention of the United Nations concerning contracts governing the international sale of goods shall be excluded. It is agreed that the contractual language shall be the language used for correspondence, whereby, in case of any doubt, German shall be considered as the contractual language.

trafo modern
trafomodern
TrafoTec

Standard trafomodern products (unless expressly otherwise ordered or offered) have the following technical and design characteristics:

Standards and approvals
All products always comply with the relevant standards and approvals. Basically the relevant standards are EN61558 and EN60076 (for the larger inductive components). Many trafomodern products are manufactured according to the relevant approvals such as UL5085 and CSA22.2.

Resin impregnation
Resin impregnation protects the product against corrosion, improves the thermal characteristics, optimises the heat dissipation, and by "gluing" the iron core significantly reduces its tendency to buzz.
As an option, the products can be tropicalised with a protective varnish. This gives additional protection against humidity and thus against corrosion, in circumstances where the ambient conditions are less than ideal –> optional equipment see page 57.

Weld seams
The yokes of small transformers are generally welded to the limbs. For small transformers up to an output of 1.6 kVA, the foot brackets are welded to the transformer limbs. From 1.6 kVA upwards they are bolted on.

Core laminations
For core laminations we use exclusively high quality dynamo steel sheets or cold rolled grain-oriented electrical steel sheets (for standard products, the thickness is 0.35 mm or 0.5 mm).

Windings
The primary as well as the secondary windings are made out of enamel insulated copper wire. Aluminium is not used as a standard.

Insulation class
The transformers are designed to insulation classes B and F, which imply a maximum constant temperature of 130 °C and 155 °C respectively.
Other generally used insulation classes to IEC 85 and IEC 216 are:
- E (120 °C)
- H (180 °C)

Ambient conditions
The transformers are suitable for installation and use in dry locations up to 1000 m above mean sea level. At altitudes in excess of 1000 m above mean sea level, the transformer's output must be reduced in accordance with the derating diagram see page 62.
Natural air-cooled transformers are designed for a maximum ambient temperature of 40 °C. If the transformers are used at higher temperatures, their output must be reduced in accordance with the derating diagram see page 62.

Protection type
The standard transformers have a protection type of IP00. Using the optional equipment described on page 54, the protection type can be increased to IP23. Higher protection types such as IP54 are not available as standard, but our sales team will always be pleased to offer them on request.

Phone: +43 2689 2744 - 0 / Fax: +43 2689 2744 - 9 / info@trafomodern.com / www.trafomodern.com

Rated values
Nominal values are always rated values. Rated values are the rated voltage, rated current (actual values), rated output, rated frequency and rated windings ratio. Together these values uniquely define a transformer.

Rated input voltage (nominal input voltage)
The supply voltage (for three-phase systems this is the phase-to-phase voltage), assigned to a transformer under defined operating conditions.

Rated frequency (nominal frequency)
The frequency assigned to a transformer for the set operational conditions.

Rated output current (nominal output current)
The output current at rated input voltage and rated frequency, assigned to the transformer for the set operational conditions.

Rated output voltage (nominal output voltage)
The output voltage (for three-phase systems this is the phase-to-phase voltage) at the rated input voltage, rated output current and rated power factor (normally power factor cos φ = 1), assigned to the transformer for the set operational conditions.

Rated power (nominal power):
The product of the rated output voltage and the rated output current; for three-phase systems this product is multiplied by √3. If the transformer has multiple output windings, this is the sum of the output powers of all the output windings that are capable of concurrent operation.

Throughput rated power
The throughput rated power is the power which can be transmitted by a transformer. In the case of a transformer with separate windings the throughput rated power is the same as the nominal power; but for autotransformers it is always higher than the nominal power.

Type rated power (for autotransformers):
For autotransformers the type rated power is the power of the core to transmit the throughput rated power.

Power factor cos φ
The power factor cos φ indicates the fraction of the apparent power (U*I) that is available as active power with a sinusoidal waveform.

Rated ambient temperature t_a
The highest temperature at which a transformer can be used in accordance with the prevailing operating conditions for continuous operation.

Losses
Unless stated otherwise, all short circuit losses should be regarded as approximate values. The values are measured at rated output current at normal operating temperature.

No-load power (= no-load losses = iron losses)
The (input) power of the off-load transformer at rated input voltage and rated frequency.

Short-circuit losses (= copper losses)
Active input power when the output side of the transformer is short-circuited
and the rated (nominal) output current is flowing...

Short time rating
The short time rating is the output at the secondary side of a control transformer with cos φ = 0.5 and a maximum voltage drop of 5 % vs. the rated (nominal) output voltage.

No-load output voltage
The output voltage of an unloaded transformer at rated input voltage and rated frequency.

No-load current
The current at the input side of an unloaded transformer at rated (nominal) input voltage and rated (nominal) frequency.

Short-circuit voltage u^K
The short-circuit voltage is that voltage to be applied to the primary winding in order that when the secondary winding is short-circuited the primary winding draws its rated current. The value is stated as a percentage of the primary rated input voltage. The value of uk correlates almost exactly with the no-load behaviour of the transformer.

How to select the size of your control transformer

Determination on the basis of continuous output
The size of the control transformer must be sufficient to ensure that the voltage drop is kept within permissible limits even under adverse conditions.
To calculate the size of the transformer, add the holding consumption of all consumers switched on at the same time, to the inrush consumption of the highest-rated consumer and multiply the result by 0.8. If the size of the consumers is approximately the same, add the sum of inrush consumption values of all consumers switched on at the same time to the sum of all holding consumption values and multiply the result by 0.8.

Determination on the basis of short time rating
If predominantly large contactors are to be switched, we recommend selecting the control transformer on the basis of the short time rating. In most cases this reduces the required transformer rating.
Make sure the holding power does not exceed the continuous output rating.

Derating for ambient temperature

If natural air-cooled transformers designed for a maximum ambient temperature of 40 °C and insulation class "B" are operated at higher ambient temperatures, the output must be reduced according to the following diagram:

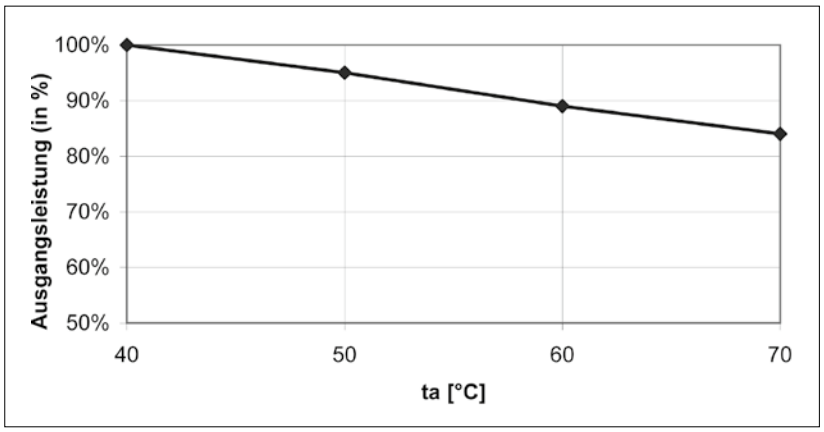

Derating for installation altitude

If natural air cooled transformers are installed at altitudes higher than 1000 m above mean sea level the output must be reduced according to the following diagram

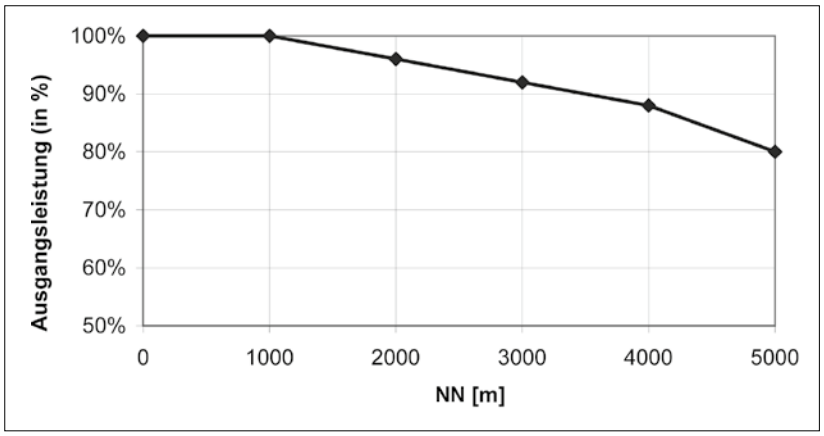

Phone: +43 2689 2744 - 0 / Fax: +43 2689 2744 - 9 / info@trafomodern.com / www.trafomodern.com

Standard configurations for three-phase transformers (extracts)

Further configurations available on request.

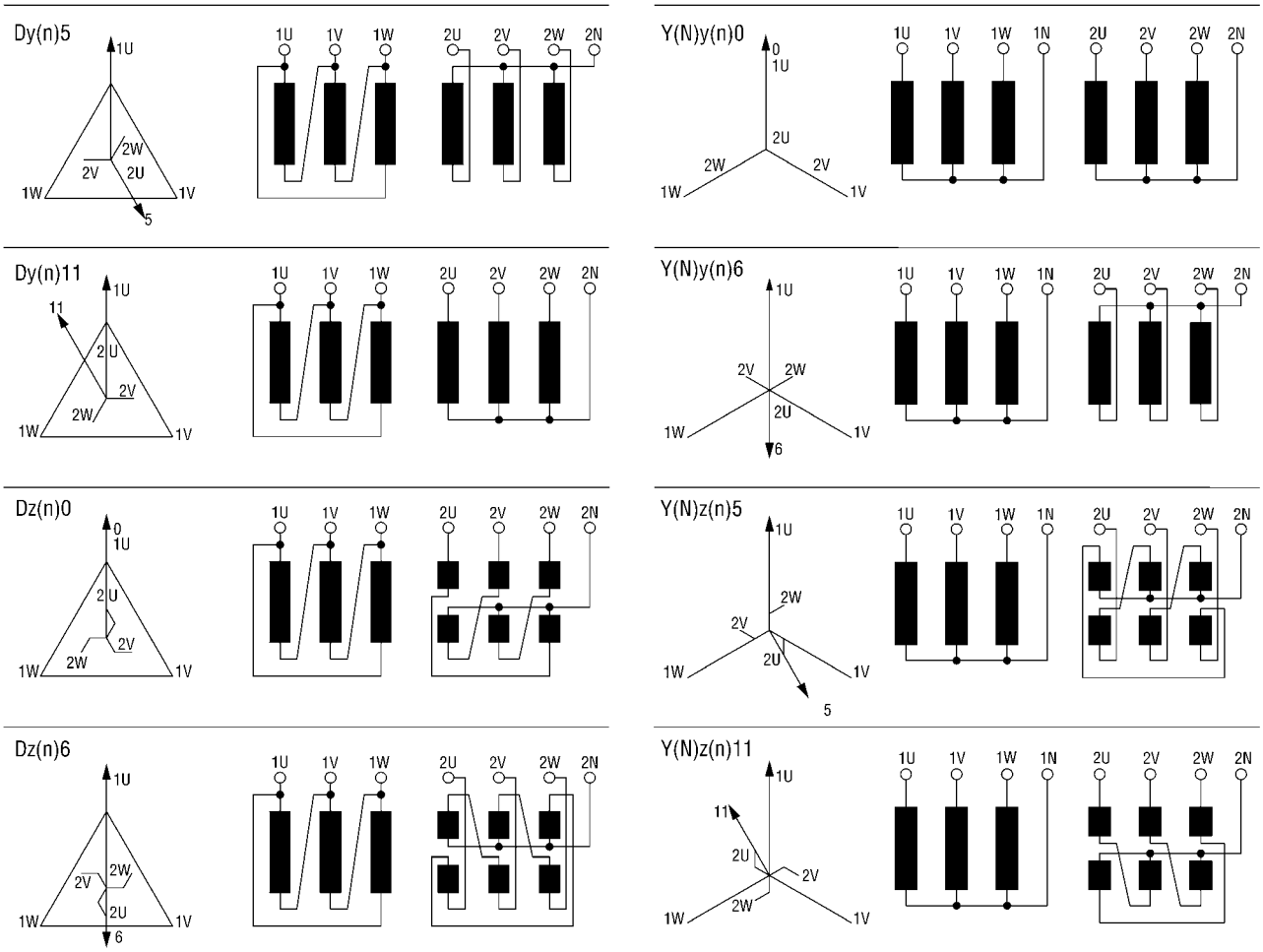

1. The primary side is indicated by upper-case letters, the secondary side by lower-case letters.
2. A Y (primary side) / y (secondary side) represents a star configuration, a D (primary) / d (secondary side) represents a delta configuration. A z (secondary side) represents a zig-zag configuration.
3. The number following the configuration indicates the phase shift between primary and secondary sides. Here the number 1 stands for a 30° phase shift, the number 2 for a 60° phase shift, the number 3 for a 90° phase shift, and so on.
4. The external neutral is indicated by the addition of an N (primary side) / n (secondary side) to the configuration.
5. The standard configuration is Yy0.

Protection of control transformers of the type series STN/STI/STZ

Control transformers must be protected at the primary side with a protective device with a tripping characteristic to EN60947-4-1. This can for instance be a motor overload switch or a transformer overload switch. The overload trip must be set to the value shown in the table below. This current is also printed on the rating plate of the transformer. If a short-circuit trip is used, this device must be set to the maximum value. For transformers with a power greater than 2 kVA, under certain supply grid conditions (Ik >6 kA) and an unfavourable starting torque the protective device may trip. In such cases trafomodern recommends the use of an inrush current limiter see page 54.

Type	S_N(B)	Voltages					
STN	[kVA]	230V	400V	415V	440V	500V	690V
0,03	0.03	0.17 A	0.10 A	0.09 A	0.09 A	0.08 A	0.06 A
0,06	0.06	0.33 A	0.19 A	0.18 A	0.17 A	0.15 A	0.11 A
0,1	0.1	0.52 A	0.30 A	0.29 A	0.27 A	0.24 A	0.17 A
0,16	0.16	0.80 A	0.46 A	0.44 A	0.42 A	0.37 A	0.27 A
0,2	0.2	0.97 A	0.56 A	0.54 A	0.51 A	0.45 A	0.32 A
0,25	0.25	1.20 A	0.69 A	0.66 A	0.63 A	0.55 A	0.40 A
0,315	0.315	1.49 A	0.86 A	0.83 A	0.78 A	0.69 A	0.50 A
0,4	0.4	1.88 A	1.08 A	1.04 A	0.98 A	0.86 A	0.63 A
0,5	0.5	2.33 A	1.34 A	1.29 A	1.22 A	1.07 A	0.78 A
0,63	0.63	2.93 A	1.69 A	1.62 A	1.53 A	1.35 A	0.98 A
0,8	0.8	3.69 A	2.12 A	2.04 A	1.93 A	1.70 A	1.23 A
1,0	1	4.57 A	2.63 A	2.53 A	2.39 A	2.10 A	1.52 A
1,3	1.3	5.99 A	3.45 A	3.32 A	3.13 A	2.76 A	2.00 A
1,6	1.6	7.30 A	4.20 A	4.05 A	3.82 A	3.36 A	2.43 A
2,0	2	9.13 A	5.25 A	5.06 A	4.77 A	4.20 A	3.04 A
2,5	2.5	11.41 A	6.56 A	6.33 A	5.97 A	5.25 A	3.80 A
3,0	3	13.57 A	7.80 A	7.52 A	7.09 A	6.24 A	4.52 A
4,0	4	17.91 A	10.30 A	9.93 A	9.36 A	8.24 A	5.97 A

Type	S_N(B)	Voltages					
STI/STZ	[kVA]	230V	400V	415V	440V	500V	690V
0,03	0.03	0.17 A	0.10 A	0.09 A	0.09 A	0.08 A	0.06 A
0,06	0.06	0.33 A	0.19 A	0.18 A	0.17 A	0.15 A	0.11 A
0,1	0.1	0.52 A	0.30 A	0.29 A	0.27 A	0.24 A	0.17 A
0,16	0.16	0.81 A	0.46 A	0.45 A	0.42 A	0.37 A	0.27 A
0,2	0.2	1.02 A	0.59 A	0.56 A	0.53 A	0.47 A	0.34 A
0,25	0.25	1.25 A	0.72 A	0.69 A	0.65 A	0.58 A	0.42 A
0,315	0.315	1.53 A	0.88 A	0.85 A	0.80 A	0.71 A	0.51 A
0,4	0.4	1.97 A	1.13 A	1.09 A	1.03 A	0.90 A	0.66 A
0,5	0.5	2.37 A	1.36 A	1.31 A	1.24 A	1.09 A	0.79 A
0,63	0.63	2.99 A	1.72 A	1.65 A	1.56 A	1.37 A	1.00 A
0,8	0.8	3.76 A	2.16 A	2.08 A	1.96 A	1.73 A	1.25 A
1,0	1.0	4.70 A	2.70 A	2.60 A	2.45 A	2.16 A	1.57 A
1,3	1.3	6.05 A	3.48 A	3.35 A	3.16 A	2.78 A	2.02 A
1,6	1.6	7.37 A	4.24 A	4.09 A	3.85 A	3.39 A	2.46 A
2,0	2.0	9.22 A	5.30 A	5.11 A	4.82 A	4.24 A	3.07 A
2,5	2.5	11.52 A	6.63 A	6.39 A	6.02 A	5.30 A	3.84 A
3,0	3.0	13.57 A	7.80 A	7.52 A	7.09 A	6.24 A	4.52 A
4,0	4.0	18.09 A	10.40 A	10.02 A	9.45 A	8.32 A	6.03 A
5,3*	5.3	24.20 A	13.91 A	13.41 A	12.65 A	11.13 A	8.07 A
8,3*	8.3	37.53 A	21.58 A	20.80 A	19.62 A	17.26 A	12.51 A
13,3*	13.3	59.56 A	34.25 A	33.01 A	31.13 A	27.40 A	19.85 A

* Type series STI available up to 4.0 kVA, above only as STZ

Phone: +43 2689 2744 - 0 / Fax: +43 2689 2744 - 9 / info@trafomodern.com / www.trafomodern.com

Copyright © 2017 trafomodern Transformatoren Ges.m.b.H.
Errors and omissions excepted; subject to revision.
Version: English, 01.2017

trafomodern Transformatoren Ges.m.b.H. / Industriestraße II/11 / 7053 Hornstein, Austria
Phone: +43 2689 2744 - 0 / Fax: +43 2689 2744 - 9
E-Mail: info@trafomodern.com / Web: www.trafomodern.com